Confidential

Dated 30 December **2024**

IZUBA CROSSBOUNDARY ENERGY RWANDA LTD

and

ENERGY UTILITY CORPORATION LIMITED

and

BIONTECH RWANDA LIMITED

WHEELING AGREEMENT

Contents

Clause		Page
1	Definitions and interpretation	2
2	Term	16
3	Conditions precedent	17
4	Scope of this Agreement	18
5	Interconnection and COD	18
6	Wheeling Service	21
7	Scheduling	22
8	Energy parameters	22
9	Excess Energy	23
10	General obligations	24
11	Metering at the Point of Delivery	25
12	Metering at the Point of Withdrawal	27
13	Payment	30
14	Indemnification and liability	34
15	Force majeure	36
16	Taxes	38
17	Default and termination	38
18	Change in Law	43
19	Resolution of disputes	44
20	Assignment	49
21	Notices	49
22	Representations and warranties	50
23	Direct Rights	53
24	Miscellaneous	54
Schedule 1 Wheeling Charge		60
Schedule 2 Conditions Precedent		61
Part 1 Izuba Conditions Precedent		61
Part 2 EUCL Conditions Precedent		61
Part 3 Customer Conditions Precedent		61

Schedule 3 Interconnection Facilities 63

Part 1 List of minimum specifications 64

Part 2 Testing and commissioning requirements 65

Schedule 4 Responsibility Assignment Matrix for the Interconnection Facility 66

Schedule 5 Metering and Reconciliation Protocol 67

Schedule 6 Deemed Delivered Energy 89

Schedule 7 Grid Code 93

Schedule 8 Forecast Energy Output 95

Schedule 9 Permits 98

Schedule 10 Construction reports 99

Schedule 11 Generating Facility Information 100

Schedule 12 Grid Operating Procedures 101

Schedule 13 Generating Facility Buy-out Price 102

THIS WHEELING AGREEMENT is dated 30 December 2024

BETWEEN:

(1) **IZUBA CROSSBOUNDARY ENERGY RWANDA LTD**, a company duly incorporated under the laws of the Republic of Rwanda with registration number 121942189 (**Izuba**) hereby represented by its Directors; and

(2) **ENERGY UTILITY CORPORATION LIMITED,** a company incorporated under the laws of the Republic of Rwanda, charged with the generation, transmission and distribution of electricity and having its registered office at Avenue du lac Ihema, P.O. Box 5634 Kigali, Rwanda (**EUCL**) hereby represented by the Managing Director; and

(3) **BIONTECH RWANDA LIMITED**, a company duly incorporated under the laws of Rwanda, with registration number 120319944 and having its registered office at KG 7 Ave 35 Kacyiru, P.O. Box 6571, Kigali, Rwanda (**Customer**) hereby represented by its Directors.

Both Izuba and EUCL are herein referred to individually as a **Party** and collectively as the **Parties**.

Each of Izuba, EUCL and the Customer are herein referred to individually as a **Wheeling Party** and collectively as the **Wheeling Parties**.

WHEREAS:

(A) EUCL is responsible for operating and maintaining the national electricity transmission and distribution systems in Rwanda (as further defined in this Agreement, the **Grid**).

(B) The Customer is developing a vaccine manufacturing facility located in the Kigali Special Economic Zone (**Customer's Facility**) which is anticipated to have an annual electricity demand of 6,000,000 kWh per Contract Year. In order for the Customer to meet its decarbonisation commitments, the Customer requires the Customer's Facility to be supplied with renewable electricity.

(C) The Customer intends to procure its renewable electricity supply from Izuba pursuant to a Power Purchase Agreement, and accordingly Izuba is developing a 4.9 MW AC/5.1 MW DC solar electric power generation system at Rwinkwavu, Kayonza District, Eastern Province, incorporating a battery energy storage system (as further defined below, the **Generating Facility**) in order to meet the Customer's Energy demand.

(D) There is a shortage of available land in the Kigali Special Economic Zone, and therefore Izuba has acquired or leased the land where the Generating Facility is to be located for a duration equivalent to or greater than the term of this Agreement (the **Lease**).

(E) Due to the Customer's Facility not being co-located with or adjacent to the Generating Facility, the Customer and Izuba will be reliant on EUCL to wheel electricity through the Grid from the Generating Facility to the Customer's Facility. EUCL is willing to provide the necessary wheeling services on the Grid in consideration for a wheeling charge pursuant to the terms and conditions of this Agreement.

(F) Izuba has agreed to construct, commission and transfer to EUCL interconnection facilities required to integrate the Generating Facility into the Grid.

In consideration of the mutual benefits to be derived and the representations and warranties, conditions and promises herein contained, and intending to be legally bound hereby, Izuba, EUCL and the Customer.

NOW IT IS HEREBY AGREED as follows:

1 Definitions and interpretation

1.1 Whenever the following terms appear in this Agreement or the Schedules hereto, whether in the singular or in the plural, present, future or past tense, they shall have the meanings stated below unless the context otherwise requires:

Affected Party means a Wheeling Party affected by a Force Majeure Event.

Affiliate means, with respect to any party, a person that controls, is controlled by, or is under common control with, such party. For the purposes of this definition, the term **control** means the beneficial ownership of more than fifty per cent (50%) of the voting shares of a company or other entity or of the equivalent rights to determine the decisions of such a company or other entity.

Agreement means this wheeling agreement, including all Schedules hereto, as amended or supplemented from time to time.

Anti-Bribery, Tax Evasion and Business Integrity Laws means any Business Integrity Laws, the Rwanda Law N° 54/2018 of 13/08/2018 on fighting against corruption, the Law Nº 028/2023 of 19/05/2023 on the prevention and punishment of money laundering, terrorist financing and the financing of proliferation of weapons of mass destruction in Rwanda, the Law N° 42/2014 of 27/01/2015 governing recovery of offence related assets in Rwanda, the Law Nº 037/2021 of 28/07/2021 amending Law n° 42/2014 of 27/01/2015 governing recovery of offence-related assets in Rwanda, Law Nº 46/2018 of 13/08/2018 on counter terrorism in Rwanda, the Law N° 039/2021 of 28/07/2021 amending Law Nº 46/2018 on counter-terrorism in Rwanda (in each case as amended from time to time) and any other law, rule, regulation and other legally binding measure relating to the prevention of bribery, corruption, tax evasion, fraud or similar or related activities such as money laundering of any jurisdiction to which the relevant person may be subject.

Anticipated Transfer Date means the date on which the Transfer Date is anticipated to occur, as further specified in Izuba's most recent construction programme referred to in clause 5.

Applicable Law means, in respect of any person, all applicable statutes, laws, ordinances, rules and regulations, including any Authorisation, policy, executive order, decree, code of practice, directive, circular, guidance note or injunction of, or made by, any Competent Authority (and including the Laws of Rwanda), in each case as in effect from time to time and binding and enforceable on or against such person.

Applicant means the Party that served a Notice of Intention to Refer.

Authorisations means all such authorisations, permits, approvals, consents, grants or certificates of registration, notifications, concessions, acknowledgments, agreements, licenses, decisions or similar items required to be obtained from any Competent Authority or other relevant governmental entity in connection with this Agreement and for the implementation of the Project.

Available Grid Capacity means an available capacity of 5 MWac, or such greater amount as may be agreed from time to time between the Parties to meet the Customer's Energy demand.

Available Periods means in any Day, the following hours:

(a) in respect of the PV system elements of the Generating Facility, from and including 08:00 hours to and including 17:00 hours; and

(b) in respect of the BESS elements of the Generating Facility, from and including 18:00 hours to and including 23:00 hours.

Bi-Annual Energy Output means in an Electricity Period:

(a) the sum of the Energy Output for all months in such Electricity Period, minus

(b) the amount set out in paragraph (a) above multiplied by the Wheeling Energy Loss Factor.

Bi-Annual Reconciliation has the meaning given to it in clause 9.2(a).

Bi-Annual Withdrawn Energy means in an Electricity Period, the aggregate Energy measured in kWh by the POW Metering Installation.

Business Day means any day other than a Saturday or Sunday and which is not a national public holiday in Rwanda.

Business Integrity Laws means any law, rule or regulation relating to financial crime, anti-terrorism, terrorism financing, trade embargoes or travel bans applicable to any jurisdiction to which the relevant person may be subject.

Change in Law means any of the following events:

(a) a change in, modification to, amendment, repeal, revocation or expiration of, any existing Law of Rwanda or Industry Document;

(b) the enactment, adoption or promulgation of any new Law of Rwanda or Industry Document; or

(c) a change in application, interpretation or enforcement of any existing Law of Rwanda or Industry Document;

that, in each case, occurs after the Signature Date.

COD means the commercial operation date of the Generating Facility, as notified by Izuba to EUCL.

Coercive Practices means impairing or harming, or threatening to impair or harm, directly or indirectly, any person or the property of any person to influence improperly the actions of a person.

Collusive Practices means any arrangement between two (2) or more persons designed to achieve an improper purpose, including influencing improperly the actions of another person.

Competent Authority means any national, supra national, regional or local government or governmental, statutory, regulatory, administrative, fiscal or government-owned body, department, corporation, commission, authority, agency, organisation or entity, or central bank (or any person whether or not government owned and howsoever constituted or called, that exercises the functions of a central bank) or stock exchange or any court, tribunal, board, bureau or judicial or arbitral body, including any regulatory authority or body or any quasi-governmental or private body exercising any regulatory, expropriation or taxing authority under or for the account of any of the above.

Conditions Precedent means the conditions precedent specified in Schedule 2.

Confidential Information means information whether written or oral, concerning any of the other Wheeling Parties or their directors, officers or employees, or the Project, which that Wheeling Party shall receive from any other Wheeling Party and which is marked (if the information is delivered in written form) or otherwise designated as or indicated to be "confidential" at the time of disclosure or which must be understood to be confidential by reason of the circumstances applicable to its disclosure.

Contract Year means a period of twelve (12) months commencing on the COD and each anniversary thereof until the end of the Term.

Corrupt Practices means the offering, giving, receiving, or soliciting, directly or indirectly, anything of value to influence improperly the actions of another person.

CP Longstop Date means the date falling six (6) months after the Signature Date, or such later date as the Wheeling Parties may agree in writing.

Cure Period means:

(a) thirty (30) Days in the case of the Customer failing to make a payment when due;

(b) zero in respect of Events of Default at clauses 17.1(f), 17.2(b), 17.2(e) or 17.3(f);

(c) sixty (60) Days with respect to any other Event of Default,

in each case, from receipt of the Event of Default Notice (or such other period as to which the Wheeling Parties may agree).

Customer's Facility has the meaning given in Recital (B).

Dashboard means a data interface to be agreed between the Wheeling Parties prior to the Energisation of the Generating Facility that is operated by Izuba and acquires, logs, manipulation proof stores and makes available data collected by the POD Metering Installation and the POW Metering Installation in 15 minute intervals.

Day means any twenty four (24) hour period beginning and ending at twelve (12:00) midnight in Rwanda.

Default Rate means the Secured Overnight Financing Rate published by the Federal Reserve Bank of New York plus two per cent (2%) per annum and the interest shall be computed for the actual number of Days elapsed on the basis of a three hundred and sixty-five (365) day year.

Deemed Delivered Energy means the deemed energy output of the Generating Facility during a Deemed Delivered Energy Period as calculated in Schedule 6 that is confirmed by EUCL in writing and/or accepted by EUCL in the Bi-Annual Reconciliation.

Deemed Delivered Energy Period means for any period in which a Grid Availability Shortfall Event occurs, but where the Generating Facility achieves at least the Generating Facility Availability during such period.

Defects Liability Period means a period of two (2) years from the Transfer Date.

Delivered Energy means the Energy measured in kWh by the POD Metering Installation. For the avoidance of doubt, the Delivered Energy is not adjusted for the Wheeling Energy Loss Factor.

Designated Person means (i) the Customer, (ii) a special purpose vehicle, a majority of the capital of which is directly or indirectly owned and controlled by the Customer, or (iii) any other person nominated by the Customer that is a reputable international developer in the power sector with experience in the operation of solar power stations and is approved by EUCL, acting in its reasonable discretion; provided in each case (i) through (iii) that such person possesses or has available to it under contract the technical and financial capacity required to perform the obligations of Izuba under this Agreement. In this definition, "control" means the power to direct the management and policies of an entity, whether through the ownership of a majority of the voting capital, by contract or otherwise.

Direct Losses means the direct losses incurred by a Wheeling Party (as the case may be) arising out of or in connection with the default and subsequent termination of this Agreement (including any reasonably incurred legal fees and expenses).

Direct Rights means the rights of the Customer under clause 23 of this Agreement.

Dispute means any dispute or difference of any kind whatsoever arising between the Wheeling Parties in connection with, or arising out of, this Agreement, including any question regarding its existence, validity, interpretation or termination.

Effective Date means the date when this Agreement comes into full force and effect, which is specified in clause 3.3.

Electricity Period means:

(a) the period on and from COD to and including the earlier to occur of (i) 30 June or (ii) 31 December in the same year as COD;

(b) thereafter, each period of six (6) consecutive months, with the second period commencing on:

    (i) where COD occurs on any date on and from 2 January to and including 30 June in any year, 1 July immediately following COD; and

    (ii) where COD occurs on any date on and from 2 July to and including 31 December in any year, 1 January immediately following COD

and the last Electricity Period shall end on 31 December immediately preceding the end of the Term.

Energise means the operation of any isolator, breaker or switch so as to enable active and reactive power to be transferred through the Point of Delivery from or to the Generating Facility to or from the Grid, and **Energisation** shall be construed accordingly.

Energy means electrical energy expressed in kWh or MWh.

Energy Output means during the relevant period, the sum of:

(a) the Delivered Energy; and

(b) any Deemed Delivered Energy.

EPC Contract means an agreement to be entered into by Izuba with the EPC Contractor for the design, manufacture, construction and commissioning of the Interconnection Facilities.

EPC Contractor means the party or parties to the EPC Contract other than Izuba.

EUCL Event of Default means an event described in clause 17.2.

Event of Default means a Customer Event of Default, an EUCL Event of Default or an Izuba Event of Default.

Event of Default Notice means a notice given pursuant to clause 17.4 which specifies in reasonable detail the EUCL Event of Default, the Customer Event of Default or Izuba Event of Default, as the case may be.

Excess Energy means in an Electricity Period, the difference between the Bi-Annual Withdrawn Energy and the Bi-Annual Energy Output where the Bi-Annual Withdrawn Energy exceeds the Bi-Annual Energy Output in such Electricity Period.

Excess Energy Payment has the meaning given in clause 9.2(b).

Expert means an independent expert with relevant experience (being, in respect of technical issues, experience in solar PV power plants) appointed pursuant to clause 19.3.

Expropriation Event means:

(a) any act or series of acts that could individually or collectively result in the direct or indirect expropriation, compulsory acquisition, nationalisation or other compulsory procurement by any Competent Authority of any asset or any other rights or interests of Izuba, or any of the shares or other equity interests of the shareholders in Izuba; or

(b) discriminatory action (which may be a single act or series of acts) by a Competent Authority which has an adverse effect on Izuba, the Project or the shareholders of Izuba such that it is equivalent to an event described in paragraph (a).

Force Majeure Event means any event or circumstance or combination of events or circumstances which is beyond the reasonable control of the Affected Party, which could not have been prevented or avoided or overcome by the Affected Party acting in accordance with Prudent

Operating Practice and which prevents, hinders or delays the performance by the Affected Party of its obligations or the enjoyment by the Affected Party of its rights under this Agreement, or renders performance so impractical as reasonably to be considered impossible in the circumstances. Force Majeure Event shall include a Natural Force Majeure Event or a GoR Risk Event, provided that the event or circumstance satisfies the foregoing requirements and does not include any event specified in clause 15.1.

Forced Outage means any partial or complete interruption of the Generating Facility or Grid that is not the result of a Planned Outage or a Force Majeure Event.

Fraudulent Practices means any act or omission, including a misrepresentation, that knowingly or recklessly misleads, or attempts to mislead, a person to obtain a financial or other benefit or to avoid an obligation.

Generating Facility means the solar PV electric generating facility and battery energy storage system (BESS) located at Rwinkwavu, including PV panels, battery packs, racking and inverters (and associated equipment), and any other ancillary equipment required to generate and deliver Energy to the Point of Delivery, and which shall include the Interconnection Facilities up until the Transfer Date.

Generating Facility Availability means the availability of the Generating Facility to export energy to the Grid.

Generating Facility Buy-out Price means the amount specified in Schedule 13.

GoR means the Government of the Republic of Rwanda.

GoR Risk Event means:

(a) act of war (whether declared or undeclared), threat of war, invasion, armed conflict or act of foreign enemy which has occurred in Rwanda or involved Rwanda;

(b) a blockade or embargo, terrorist act, revolution, riot insurrection, civil commotion, public demonstration or sabotage which has occurred in Rwanda or involved Rwanda;

(c) national strikes, work stoppages or other industrial action that are not restricted in their scope to either Party;

(d) a Change in Law;

(e) a Lapse of Authorisation; or

(f) Expropriation Event.

Grid means the high and medium voltage transmission or distribution lines and ancillary equipment on EUCL's side of the Point of Delivery through which the Energy will be transmitted and distributed, provided that it shall only include the Interconnection Facilities on and from the Transfer Date.

Grid Availability means during a period, the availability of the Grid to accept the export of the Delivered Energy.

Grid Availability Event has the meaning given in clause 13.2(a).

Grid Availability Shortfall Event has the meaning given in clause 13.2(a).

Grid Code means the parts of the grid code published by RURA that is applicable to the Generating Facility, the Grid and the Wheeling Service as set out in Schedule 6.

Guaranteed Grid Availability means during an Electricity Period, a Grid Availability of ninety-five per cent (95%) of the time over such period.

Independent Engineer means an independent reputable engineer that complies with the requirements of clause 5.7 and who is selected and appointed by Izuba in consultation with EUCL and which shall owe a duty of care to both of the Parties.

Industry Documents means the Grid Code, and any other multi-party codes, grid connection or operating polices, guidelines, standards, or regulations which generally apply to entities operating in the power sector in Rwanda, as any of them may be amended from time to time.

Interconnection Facilities means the interconnection plant and equipment required to connect the Generating Facility to the Grid at the Point of Connection which is procured, designed, installed, constructed and commissioned by Izuba as specified in Schedule 3.

International Integrity Laws means UK Bribery Act 2010, the UK Criminal Finances Act 2017, the OECD Convention on Combating Bribery of Foreign Public Officials in International Business Transactions 1997, the US Foreign Corrupt Practices Act 1977, the UN Convention Against Corruption 2003 and any other law, rule, regulation and other legally binding measure relating to the prevention of bribery, corruption, tax evasion, fraud or similar or related activities such as money laundering of any jurisdiction to which the relevant person may be subject.

Invoice means a statement reflecting amounts payable pursuant to this Agreement.

Invoice Due Date means thirty-five (35) Business Days after the date of receipt of an Invoice.

Izuba Event of Default means an event described in clause 17.1.

kW means kilowatt.

kWh means kilowatt-hour.

Lapse of Authorisation means any Authorisation: (a) ceasing to remain in full force and effect (other than in accordance with its terms), or (b) not being issued or renewed (or being delayed in being issued or renewed) upon application having been properly and timely made and diligently pursued, or (c) being made subject, subsequent to its grant, upon renewal or otherwise, to any material terms or conditions; or (d) being unlawfully revoked.

Latent Defect means a defect or damage in the design, materials or workmanship of the Interconnection Facilities that a reasonable inspection of the Interconnection Facilities by EUCL would not have revealed at the Transfer Date.

Laws of Rwanda means any national, provincial or local law, act, requirement (including license and permit requirements), ordinance, code, order, rule, resolution, regulation, executive order, decree, policy, judicial decision, notification or directive of any Competent Authority that is at any time applicable to the Wheeling Parties, this Agreement, the Generating Facility, the Project, the Grid, or any part thereof, and shall include all laws and standards relating to health and safety and environmental and social compliance (and **Law of Rwanda** shall be construed accordingly).

Lease has the meaning given to it in Recital (D).

Lenders means the lenders or other financiers or investors who at any time provide either debt, equity or grant funding to Izuba, together, in each case, with their respective successors and permitted assigns (and **Lender** shall be construed accordingly).

Low Power Factor Surcharge means the amount calculated in accordance with the Low Power Factor (LPF) Surcharge formula in Schedule 5.

Maximum Import Capacity means 5 MWac or such greater amount as may be agreed between the Wheeling Parties from time to time.

Metered Energy means the Withdrawn Energy, unless it is higher than the Delivered Energy, in which case it shall mean the Delivered Energy.

Metering and Reconciliation Protocol means the worked example setting-out the calculation of the metering and reconciliation processes which is appended to this Agreement as Schedule 5, and as shall be updated as agreed from time to time between the Wheeling Parties.

Minimum Generating Facility Availability means ninety six per cent (96%) of Generating Facility Availability during Available Periods in an Electricity Period.

Minimum Monthly Output means 280 MWh per Month, or such lower amount as is equal to the Withdrawn Energy in a Month where such consumption is less than 280 MWh.

Minimum State of Charge means the relative state of charge below which the BESS is never drawn, specified as a percentage of the total capacity, in this case 10%.

Month means a calendar month according to the Gregorian calendar beginning at 12:00 midnight on the last Day of the preceding month and ending at 12:00 midnight on the last Day of that month. **Monthly** shall be construed accordingly.

Monthly Peak Delivered Energy means during Peak Hour Periods in a Month, the aggregate Energy measured in kWh by the POD Metering Installation and Deemed Delivered Energy.

Monthly Peak Withdrawn Energy means during Peak Hour Periods in a Month, the aggregate Energy measured in kWh by the POW Metering Installation.

MW means Megawatt.

MWh means Megawatt hour.

Natural Force Majeure Event means:

(a) lightning, storm, flood, drought or other unusual or extreme adverse weather;

(b) earthquake, volcanic eruption or other natural disaster;

(c) radioactive, biological or chemical contamination, explosion, fire or ionising radiation;

(d) plague, famine, disease, epidemic or pandemic; and

(e) a political event occurring outside Rwanda which does not involve Rwanda, including any act of war (whether declared or undeclared), invasion, armed conflict or act of foreign enemy, blockade, embargo, revolution, riot, insurrection, civil commotion, sabotage, strikes, works to rule or go-slows that are widespread or of a political nature, or any acts of terrorism.

Notice of Intention to Refer means a notice given by one Wheeling Party to the other Wheeling Parties (as applicable) of its intention to refer the particular Dispute to expert determination in accordance with clause 19.3.

Notice of Termination means a notice of termination delivered by (i) EUCL or the Customer pursuant to clause 17.5(a), (ii) Izuba or the Customer pursuant to clauses 17.5(b) or 17.6 or (iii) any Wheeling Party pursuant to clause 3.5.

Obstructive Practices means any of:

(a) deliberately destroying, falsifying, altering, or concealing evidence material to any investigation, or making false statements to investigators, in order to materially impede any

investigation into allegations of any Coercive Practice, Collusive Practice, Corrupt Practice, Fraudulent Practice, or Obstructive Practice;

(b) threatening, harassing, or intimidating any person to prevent such person from disclosing its knowledge of matters relevant to any such investigation or from pursuing any such investigation; or

(c) acts intended to materially impede the exercise of any person's legal or contractual rights of access to information.

Output Shortfall Payment means in respect of any Month where the Energy Output is less than the Minimum Monthly Output, the amount calculated as the Minimum Monthly Output for such Month less the Energy Output for such Month multiplied by the Regulated Tariff Rate.

Peak Hour Period means the time period between 18:00 hours and 23:00 hours (or such other peak period as may be agreed between the Wheeling Parties from time to time).

Peak Period Excess Energy Payment has the meaning given to it in clause 9.1(b).

Peak Period Floor means 96MWh during Peak Hour Periods in a Month.

Peak Period Reconciliation has the meaning given to it in clause 9.1(a).

Peak Period Threshold means 144MWh during Peak Hour Periods in a Month.

Planned Outage means a scheduled shut-down for maintenance of the Generating Facility or the Grid.

POD Check Metering Equipment means all meters and metering devices located at the Point of Delivery and indicated on the single line diagram found at Schedule 3 and used to measure the delivery and receipt of Energy at the Point of Delivery for back-up purposes.

POD Main Metering Equipment means all meters and metering devices located at the Point of Delivery and indicated on the single line diagram found at Schedule 3 and used to measure the delivery and receipt of Energy at the Point of Delivery.

POD Metering Installation means the POD Main Metering Equipment and the POD Check Metering Equipment.

Point of Connection means the physical point where the Generating Facility and the Grid are connected at the Rwinkwavu 15/110kV substation as further specified in Schedule 3.

Point of Delivery means the metering point at which the Delivered Energy is measured, located within the ownership boundary of the Generating Facility as further specified in Schedule 3.

Point of Withdrawal means the metering point at which the Withdrawn Energy is withdrawn by the Customer, located within the ownership boundary of the Customer's Facility as further specified in Schedule 3.

POW Check Metering Equipment means all meters and metering devices located at the Point of Withdrawal and indicated on the diagram found at Schedule 3 and used to measure the delivery and receipt of Energy at the Point of Withdrawal for back-up purposes.

POW Main Metering Equipment means all meters and metering devices located at the Point of Withdrawal and indicated on the diagram found at Schedule 3 and used to measure the delivery and receipt of Energy at the Point of Withdrawal.

POW Metering Installation means the POW Main Metering Equipment and the POW Check Metering Equipment.

Power Purchase Agreement means the agreement between the Customer and Izuba for the Generating Facility to supply renewable electricity supply in order to meet the Customer's Energy demand.

Project means (a) the development, design, financing, procuring, construction, commissioning, testing, insuring, ownership, operation and maintenance of the Generating Facility, and (b) the development, design, financing, procuring, construction, commissioning, testing and handover of the Interconnection Facilities, and all activities incidental thereto.

Prudent Operating Practice means, in relation to either Party, generally accepted industry operating and maintenance practices with respect to the electric power generation, transmission and distribution industry. This covers standards of practice obtained by exercising that degree of skill, diligence, prudence and foresight which could reasonably be expected from a skilled and experienced person engaged in the same type of undertaking.

PV means photovoltaic.

Regulated Tariff Rate means the tariff rate corresponding to the Customer's published tariff category as may be determined by a Competent Authority from time to time.

Rwanda means the Republic of Rwanda.

RWF means Rwandan Franc, the lawful currency of Rwanda.

Rules means the UNCITRAL Arbitration Rules applicable at the time the Dispute is referred to arbitration in accordance with clause 19.4 (*Arbitration*).

RURA means the Rwanda Utilities Regulatory Authority or any successor to it in that role.

Sanctions means any trade, economic or financial sanctions laws, regulations, embargoes or restrictive measures administered, enacted or enforced by a Sanctions Authority.

Sanctions Authority means (i) the United States, (ii) the United Nations Security Council, (iii) the European Union or any member state thereof, (iv) the United Kingdom, (v) any other governmental institution or agency with responsibility for imposing, administering or enforcing Economic Sanctions Law, or (vi) the respective governmental institutions of any of the foregoing including, without limitation, OFAC, the U.S. Department of Commerce, the U.S. Department of State, any other agency of the U.S. government, and the UK Treasury.

Sanctions List means any of the lists of designated or sanctioned individuals or entities (or equivalent) issued by any Sanctions Authority, each as amended, supplemented or substituted from time to time, including, without limitation, the List of Specially Designated Nationals and Blocked Persons, Foreign Sanctions Evaders List, Sectoral Sanctions Identifications List, and List of Persons Identified as Blocked Solely Pursuant to Executive Order 13599, each administered by OFAC, the Consolidated List of Persons, Groups and Entities Subject to EU Financial Sanctions, and the Consolidated List of Financial Sanctions Targets in the UK and Ukraine: List of Persons Subject to Restrictive Measures in View of Russia's Actions Destabilising the Situation in Ukraine, each administered by the UK Treasury.

Settlement Period means a period of sixty (60) minutes beginning on the hour.

Signature Date means the date upon which the Wheeling Parties execute this Agreement, as first set forth above.

Tax means any charge, fee, levy or other assessment imposed by any Competent Authority, whether federal, state, local or otherwise; including all income, withholding, gross receipts, business, environmental, value added, capital gain, duties, capital stock, registration, excise, ad valorem, real property, personal property, land, local development, license, sales, production, occupation, use, service, transfer, payroll, employment, social security, travel, franchise, severance, bonus, or other tax of any kind, as well as any charges and assessments (including any interest, penalties or additions to tax attributable to or imposed on or with respect to any such assessment, whether disputed or not and all stamp or documentary taxes and fees).

Term means the term of this Agreement, being the period commencing on the Signature Date and, unless terminated earlier pursuant to the provisions of this Agreement, expiring on the 20th anniversary of COD and as may be extended pursuant to clause 2.3.

Transfer Date means the actual date on which the Interconnection Facilities are transferred to EUCL pursuant to clause 5.6.

US Dollar or USD means the lawful currency of the United States of America.

VAT means value added tax imposed or charged under the Laws of Rwanda.

Wheeled Energy means the Metered Energy which is the subject of the Wheeling Service.

Wheeling Charge has the meaning given in Schedule 1.

Wheeling Energy Loss Factor means the percentage of energy lost during the wheeling of energy from the Point of Delivery to the Point of Withdrawal. The Wheeling Energy Loss Factor shall be three per cent (3%) of Delivered Energy.

Wheeling Service means the safe and reliable operation of the Grid to ensure the dispatch and movement of Energy from the Point of Delivery to the Point of Withdrawal and the discharge of EUCL's obligations under this Agreement in particular the deduction of the Bi-Annual Energy Output from the Bi-Annual Withdrawn Energy during the Bi-Annual Reconciliation.

Withdrawn Energy means the Energy measured in kWh by the POW Metering Installation.

1.2 Interpretation

In this Agreement, unless the context otherwise requires:

(a) only the clauses creating rights, obligations and/or liabilities for the Customer or Wheeling Party/Parties, shall bind the Customer;

(b) references to any document (including this Agreement) are references to that document as amended, consolidated, supplemented, novated or replaced from time to time, and to all annexes, schedules, attachments, supplements and the like which form part thereof;

(c) terms defined in any number, gender or tense shall have the correlative meaning when used in any other number, gender or tense;

(d) the words **include**, **including** and **in particular** indicate examples or emphasis only and shall not be construed as limiting the generality of any preceding words;

(e) reference to persons means any individual, association, trust, joint venture, unincorporated association, consortium, partnership (whether or not having separate legal personality), corporation, firm, government wherever organised or incorporated and whether or not having separate legal personality; and references to any person, including any Wheeling Party hereto, shall include that person's successors in title, permitted assignees, transferees, delegates, sub-delegates or appointees (unless the transfer to the successor in title or transferee was in breach of this Agreement);

(f) where this Agreement defines a word or expression, related words and expressions have a consistent meaning;

(g) all periods of time and dates shall be based on and computed according to the Gregorian calendar and times of Day are times of the Day in Rwanda;

(h) in the computation of periods of time from a specified Day to a later specified Day, from means from and including and until means to and including;

(i) references to any clause, paragraph, Part, Schedule or recital are to those contained in, or appended to, this Agreement;

(j) the expression "this clause", unless followed by the number of a specific part of the clause, refers to the whole clause in which it occurs;

(k) the table of contents, clause and Schedule headings are inserted for convenience only and shall not affect the interpretation or construction of this Agreement;

(l) **written** or **in writing** includes email;

(m) references to any legislation or legislative provision or Industry Document include references to any statutory modification or re-enactment of such legislation or legislative provision or Industry Document and any legislation or legislative provision or Industry Document substituted for that legislation or legislative provision or Industry Document, provided that nothing herein shall prevent a Wheeling Party from seeking relief for a Change in Law as provided in this Agreement;

(n) to the extent there exists a conflict between any provisions of this Agreement and any Schedule, the provisions of this Agreement shall prevail, but the absence of a provision in a Schedule shall not constitute a conflict;

(o) references to a week mean a period of seven (7) Days from Sunday until Saturday;

(p) in carrying out its obligations under this Agreement, each Wheeling Party shall have an implied obligation or duty of good faith; and

(q) all the Schedules are an integral part of this Agreement.

2 Term

2.1 The term of this Agreement shall commence on the Signature Date and shall end on the last Day of the Term unless it is terminated earlier pursuant to the provisions of this Agreement or extended by agreement of the Wheeling Parties as set out in clause 2.3.

2.2 The termination of this Agreement shall be without prejudice to all rights and obligations of the Wheeling Parties accrued under this Agreement prior to such termination.

2.3 This Agreement may be extended for an additional period on terms agreed in writing between the Wheeling Parties.

3 Conditions precedent

3.1 The rights and obligations of the Wheeling Parties under this Agreement (other than under clauses 1 (*Definitions and interpretation*), 2 (*Term*), 15 (*Force majeure*), 18 (*Change in Law*), 19 (*Resolution of disputes*), 20 (*Assignment*), 21 (*Notices*), 22 (*Representations and warranties*) and 24 (*Miscellaneous*) and this clause 3 (*Conditions precedent*), which shall become effective on the Signature Date) shall become effective upon the later of:

(a) the satisfaction by Izuba of each of the Conditions Precedent set out in Part 1 of Schedule 2;

(b) the satisfaction by EUCL of each of the Conditions Precedent set out in Part 2 of Schedule 2; and

(c) the satisfaction by the Customer of each of the Conditions Precedent set out in Part 3 of Schedule 2,

provided that the Parties may (in their absolute discretion) agree in writing to waive the satisfaction of any of the Conditions Precedent.

3.2 Each Wheeling Party shall use its reasonable endeavours to (i) fulfil the Conditions Precedent for which it is wholly or partly responsible and (ii) assist the other party in satisfying its Conditions Precedent provided, however, no Wheeling Party shall have any liability to any other Wheeling Party with respect to this Agreement for failing to achieve the Effective Date provided that it has used its reasonable endeavours to achieve the Effective Date.

3.3 Once each of the Conditions Precedent have been satisfied or waived in accordance with the foregoing, this Agreement shall come into full force and effect, and the date of the occurrence of the last Condition Precedent shall be the **Effective Date** of this Agreement.

3.4 Each Wheeling Party shall provide an update to all other Wheeling Parties on its progress towards achieving satisfaction of the Conditions Precedent every Month. The Wheeling Parties shall jointly review the progress towards achieving satisfaction of the Conditions Precedent whenever necessary following such update and shall notify each other promptly of the satisfaction of each Condition Precedent or any event which may jeopardise the satisfaction of a Condition Precedent.

3.5 Subject to clause 3.6, if any of the Conditions Precedent have not been satisfied or waived by the CP Longstop Date (unless the Wheeling Parties agree in writing to extend the CP Longstop Date), any other Wheeling Party may terminate this Agreement by giving written notice of termination to every other Wheeling Party which has not satisfied its Conditions Precedent and, subject to clause

3.4, no Wheeling Party shall have any liability to any other Wheeling Party with respect to this Agreement.

3.6 In respect of the Condition Precedent set out at Part 1(b)Schedule 21(b) of Schedule 2 to be received from, approved or issued by a Competent Authority, and Izuba has submitted the application for such generation license in a proper and timely manner in accordance with the Laws of Rwanda, but the relevant Competent Authority has not responded, approved, issued or provided such generation license, on or before the CP Longstop Date then, if Izuba so elects by providing written notice to the other Wheeling Parties, the CP Longstop Date shall be extended on a day-for-day basis until such Condition Precedent is satisfied provided always that such extension of the CP Longstop Date shall be limited to nine (9) Months.

4 Scope of this Agreement

4.1 EUCL agrees and acknowledges that the supply of renewable electricity from the Generating Facility to the Customer's Facility is a critical aspect of the Customer's investment in Rwanda, and therefore that the Wheeling Service provided pursuant to this Agreement is critical for both the feasibility of the Customer's Facility and the Generating Facility, and therefore the investment made or to be made by both the Customer and Izuba in Rwanda.

4.2 This Agreement shall govern the terms and conditions upon which the Wheeling Service is provided by EUCL in return for the Wheeling Charge and upon which the Interconnection Facilities are constructed, commissioned and incorporated within the Grid.

4.3 Nothing in this Agreement implies that the transmission capacity should be reserved upon a specific "contract path" between the Point of Delivery and the Point of Withdrawal or that any ancillary services will be provided by Izuba to EUCL.

4.4 This Agreement shall not imply any sale and purchase of electricity between Izuba and EUCL.

5 Interconnection and COD

5.1 Izuba shall:

(a) at its expense, design, finance, procure, construct, install, commission and test the Interconnection Facilities in accordance with this Agreement, and Prudent Operating Practice;

(b) provide to EUCL the design for the Interconnection Facilities (the **Interconnection Facilities Design**). EUCL shall, within thirty (30) Days of the receipt of such submission by Izuba, provide in writing either its approval of such Interconnection Facilities Design or any alterations required by the EUCL to such Interconnection Facilities Design (and in the absence of any such provision of approval or alterations, EUCL shall be deemed to have

approved the Interconnection Facilities Design). Izuba shall make any alterations required by the EUCL to the Interconnection Facilities Design and to the construction of the Interconnection Facilities whereupon the process specified in this clause 5.1(b) shall be repeated.

(c) within ten (10) Business Days' of the COD, provide to EUCL a construction completion report that evidences the installed capacity test requirements under the EPC Contract between Izuba and the EPC Contractor have been satisfied.

5.2 EUCL shall:

(a) cooperate with Izuba during the installation, construction, testing, commissioning and Energisation of the Interconnection Facilities. Such cooperation shall be done in accordance with the responsibility of each Party stipulated in Schedule 4 of this Agreement;

(b) accept the Energy generated by the Generating Facility during the testing and commissioning period, and enable Izuba to commission and Energise the Interconnection Facilities, and connect Izuba's Generating Facility to the Grid in accordance with Izuba's construction programme; and

(c) negotiate any transfer instrument referred to in clause 5 in good faith and otherwise ensure that it is able to accept the transfer of the Interconnection Facilities on the Anticipated Transfer Date.

5.3 Izuba shall provide its construction programme to EUCL on or around the Effective Date, and shall provide to EUCL Monthly updates on its construction programme.

5.4 Izuba shall test and commission the Interconnection Facilities in accordance with the commissioning and testing procedures set out in Schedule 3. The Wheeling Parties agree that the Customer may be present during the testing and commissioning of the Interconnection Facilities.

5.5 Izuba shall provide to EUCL at least ten (10) Business Days' prior written notice of the testing and commissioning of the Interconnection Facilities. EUCL's representative may be present for the purpose of observing any such tests, but the tests may proceed in the absence of EUCL's representative.

5.6 The Transfer Date shall then occur on the Day falling five (5) Business Days after the Day on which Izuba certifies to EUCL the satisfactory completion of testing and commissioning of the Interconnection Facilities, provided that if EUCL objects to such satisfactory completion during this period, at least two (2) Independent Engineers shall be proposed by Izuba from the list of multinational engineering firms under clause 5.7(a) within five (5) Business Days after EUCL's objection. EUCL shall provide its non-objection, not to be unreasonably withheld, on at least one

(1) of the proposed Independent Engineers within fifteen (15) Days from its receipt of the proposal from Izuba. The appointed Independent Engineer shall determine and certify the satisfactory completion of testing and commissioning of the Interconnection Facilities. The Transfer Date shall then occur on the Day following the Day on which the Independent Engineer delivers its certification to the Parties. The certification by the Independent Engineer shall be final and binding to the Parties, except in the event of fraud, undisclosed bias or conflict of interest, in which case either Party shall be entitled to refer the matter to arbitration in accordance with clause 19.4 within fifteen (15) Days from the delivery to the Parties of such certificate.

5.7 The Independent Engineer appointed must:

(a) be one of the following multinational engineering firms:

(i) WSP;

(ii) Mott Macdonald;

(iii) DNVGL; or

(iv) Zutari.

(b) have proven qualifications, commercial and practical experience in the area of electrical grid interconnection equipment;

(c) have no interest or duty which conflicts or may conflict with his/her function as an Independent Engineer, and the Independent Engineer will be required to fully disclose any such interest or duty before his/her appointment; and

(d) not be an employee or former employee of any of the Parties or any of their Affiliates.

5.8 On the Transfer Date, Izuba shall transfer title to, and risk in, the Interconnection Facilities to EUCL, and EUCL shall accept and own the Interconnection Facilities as legal and beneficial owner with all rights, title and interest therein free of any encumbrances, together with all the applicable warranties and guarantees in respect thereof and the associated land rights. Within the Defects Liability Period, Izuba shall be responsible to complete any aspect of the Interconnection Facilities which is outstanding on the Transfer Date, and EUCL shall notify Izuba of any Latent Defect in the Interconnection Facilities within fifteen (15) Days of becoming aware of such Latent Defect. Izuba and its EPC Contractor shall be given access to the Interconnection Facilities for purposes of inspecting such Latent Defect. Izuba shall exercise its rights of claim in relation to such Latent Defect under the EPC Contract and ensure that such Latent Defect is fixed within a period of twelve (12) months following receipt of written notification from EUCL (which period may be extended by notification from Izuba and approval by EUCL), unless Izuba is able to prove that the issue is in fact due to EUCL's act or omission. If parts of the Interconnection

Facilities are repaired, rectified or replaced by Izuba or its EPC Contractor during the Defects Liability Period, the Defects Liability Period for such part of the Interconnection Facilities shall automatically recommence and the two (2) years shall be measured from the date that such remedial work is completed.

5.9 Izuba shall fund the cost of designing, engineering, procuring, supplying, erecting, delivering, constructing, installing, testing and commissioning the Interconnection Facilities.

5.10 The Parties shall execute a written instrument to document the transfer of the Interconnection Facilities pursuant to this clause 5 in accordance with the Laws of Rwanda to confirm and evidence the transfer of title to the Interconnection Facilities and the associated land rights, together with the risk of loss and the liabilities of ownership and operation thereof, from Izuba to EUCL as of the Transfer Date.

5.11 On and from the Transfer Date:

(a) Izuba's obligations in respect of the Interconnection Facilities shall be deemed to be satisfied and Izuba shall not be liable to EUCL for any matter or thing arising under or in connection with the Interconnection Facilities;

(b) EUCL shall have care, custody and control over the Interconnection Facilities (which shall then become part of the Grid), shall own, operate and maintain the Interconnection Facilities in accordance with Prudent Operating Practice and the Laws of Rwanda, and shall bear the risk of loss and the liabilities of ownership and operation thereof; and

(c) Izuba shall not encumber, or attempt to encumber or cause to be encumbered, the Interconnection Facilities.

5.12 Izuba shall have the right for the Generating Facility to be and remain energised and connected to the Grid at the Point of Connection for the Term, and EUCL shall, subject to and in accordance with this Agreement, keep the Point of Delivery energised at all times.

5.13 Izuba shall notify EUCL of the occurrence of the COD and acknowledges that the Transfer Date shall be a condition of the occurrence of the COD.

6 Wheeling Service

6.1 Following construction and Energisation of the Generating Facility, and thereafter at all times during the Term:

(a) EUCL shall ensure that:

(i) the Generating Facility shall be and remain connected at the Point of Connection; and

(ii) Izuba shall be able to inject Energy into the Grid at the Point of Delivery up to the Available Grid Capacity and shall be able to take Energy from the Grid at up to the Maximum Import Capacity; and

(b) EUCL shall provide the Wheeling Service and accordingly shall make the Energy injected by Izuba at the Point of Delivery available for withdrawal by the Customer at the Point of Withdrawal.

6.2 The Parties acknowledge that the Point of Connection shall serve as the point of injection into the Grid up until the Transfer Date, and that the provisions of this Agreement relevant to this shall be construed accordingly.

7 Scheduling

7.1 Izuba shall provide EUCL with Month-ahead generation projections on a per Settlement Period basis and Day-ahead availability declarations on a per Settlement Period basis in respect of the Generating Facility.

7.2 Each Party shall notify the other Party:

(a) no later than fourteen (14) Days in advance of any Planned Outage, and the Parties shall use reasonable endeavours to coordinate their respective Planned Outages; and

(b) as soon as reasonably practicable following the occurrence of a Forced Outage, together with details of the anticipated duration of the Forced Outage.

8 Energy parameters

8.1 Without prejudice to the following provisions of this clause 8, Izuba shall ensure that the Generating Facility is developed, constructed, commissioned, operated and maintained in such a way so as to meet the Customer's Energy demand.

8.2 Izuba shall ensure that:

(a) subject to the Wheeling Service being provided in accordance with this Agreement, the Generating Facility is capable of generating sufficient Energy to meet the Customer's daily Energy demand of four (4) MWh over the Peak Hour Period;

(b) the Generating Facility is able to achieve a ramp rate of one point five per cent (1.5%) of the Installed Capacity per minute during daylight hours; and

(c) except to the extent caused by a Force Majeure Event and/or a Grid Availability Event, in each Month the Energy Output is at least equal to the Minimum Monthly Output.

(d) the Generating Facility is operated in accordance with Schedule 11.

8.3 For each Electricity Period, any Delivered Energy exceeding Withdrawn Energy will be treated as additional Energy injected to support Grid stability.

8.4 EUCL shall supply the entire Withdrawn Energy at the Point of Withdrawal. If Delivered Energy is insufficient to meet Withdrawn Energy at any time, EUCL shall deliver Energy to the Point of Withdrawal in order to meet the Customer's demand.

8.5 Except to the extent caused by a Force Majeure Event, Izuba shall use best endeavours to achieve the Minimum Generating Facility Availability during the Term and shall evidence to EUCL the remedy measures taken by Izuba upon any failure to meet the Minimum Generating Facility Availability.

8.6 The Customer agrees that it will use commercially reasonable efforts to provide EUCL with at least twenty (20) Business Days' notice of any structural change to its operations that is reasonably likely to lead to a material increase in the Withdrawn Energy such that the Bi-Annual Energy Output is less than the Bi-Annual Withdrawn Energy. Where the Customer provides a notice pursuant to this clause 8.6, the Customer agrees that a separate arrangement (e.g. on advance payments on expected future Excess Energy Payments) shall be negotiated in good faith with EUCL.

8.7 In each Month where the Energy Output is less than the Minimum Monthly Output, the Customer shall pay to EUCL the Output Shortfall Payment up to a maximum aggregate amount of USD 84,000 in each Contract Year throughout the Term.

8.8 The Parties agree that:

(a) the Output Shortfall Payment shall be EUCL's sole and exclusive remedy, and the Customer's sole and exclusive liability, for Izuba failing to deliver the Energy Output and for any breach of clause 8.2(c); and

(b) any breach of clause 8.2(c) shall not constitute an Izuba Event of Default.

9 Excess Energy

9.1 Peak Periods Excess Energy

(a) Following the last Day of each Month the Parties shall conduct a reconciliation of the Monthly Peak Delivered Energy compared to the Monthly Peak Withdrawn Energy in the previous Month (**Peak Period Reconciliation**).

(b) If the Peak Period Reconciliation determines that:

(i) the Monthly Peak Withdrawn Energy exceeds the Monthly Peak Delivered Energy; and

(ii) the Monthly Peak Delivered Energy is less than the Peak Period Floor; and/or

(iii) the Monthly Peak Withdrawn Energy is greater than the Peak Period Threshold

the Customer shall, in each case, pay EUCL for the Energy above the Peak Period Threshold and/or below the Peak Period Floor that EUCL supplied to the Customer at the Point of Withdrawal during the relevant Peak Hour Periods during the relevant Month at the Regulated Tariff Rate (the **Peak Period Excess Energy Payment**).

9.2 Non-Peak Excess Energy

(a) Following the last Day of each Electricity Period, the Wheeling Parties shall conduct a reconciliation in accordance with the Metering and Reconciliation Protocol (the **Bi-Annual Reconciliation**) of the Bi-Annual Energy Output compared to the Bi-Annual Withdrawn Energy.

(b) If the Bi-Annual Reconciliation determines that there is Excess Energy, the Customer shall pay EUCL for the Excess Energy at the Regulated Tariff Rate (the **Excess Energy Payment**), as further specified in the Metering and Reconciliation Protocol. The Wheeling Parties agree that any Peak Period Excess Energy Payments due in the relevant Electricity Period shall be deducted from the Excess Energy Payment payable by the Customer to EUCL pursuant to this clause 9.2(b) in respect of such Electricity Period.

9.3 Any dispute arising under the Bi-Annual Reconciliation or Peak Period Reconciliation may be referred by any Wheeling Party for dispute resolution in accordance with clause 19.1 and thereafter for determination by an Expert subject to clause 19.2, unless the amount in dispute exceeds USD 100,000.00, in which case such matter shall be referred to arbitration in accordance with clause 19.4.

10 General obligations

10.1 Each Wheeling Party shall operate and maintain its system and perform its obligations under this Agreement in accordance with the Industry Documents, Prudent Operating Practice and Applicable Law.

10.2 The Wheeling Parties shall provide each other with any information that is reasonably required for the purposes of this Agreement as stipulated in the Grid Code.

10.3 The Wheeling Parties shall agree on a Dashboard that allows the real-time sharing of meter data and other data that is relevant for the calculation of payments under this Agreement.

11 Metering at the Point of Delivery

11.1 Installation and ownership of POD Metering Installation

Izuba shall, at its expense, design, finance, procure, construct, install, calibrate, own, operate and maintain the POD Metering Installation in accordance with this Agreement, the Industry Documents and any applicable Laws of Rwanda. EUCL shall have the right to witness the installation, calibration and testing of the POD Metering Installation.

11.2 Testing and inspection of POD Metering Installation

(a) Izuba shall inspect and test at its own expense the POD Metering Installation for accuracy at least once per Contract Year.

(b) With respect to each testing of the POD Metering Installation, Izuba shall give EUCL and the Customer no less than seven (7) Days' advance notice of such testing, and EUCL and the Customer may have a representative present during any such testing, as well as during any inspection of the POD Metering Installation or adjustment thereof (but the test, inspection or adjustment may be taken if EUCL and/or the Customer has no representative present if EUCL and the Customer were informed in accordance with this clause).

(c) Additional testing may be conducted, at any reasonable time upon request by EUCL or the Customer subject to EUCL or the Customer (as applicable) providing reasonable evidence of an inaccuracy of the POD Metering Installation. The additional testing shall be at EUCL's or the Customer's (as applicable) expense, unless the test indicates that the POD Metering Installation is not within the accuracy limit specified in clause 11.3(e) or is otherwise functioning improperly, in which case Izuba shall bear the cost of the additional test in respect of the POD Metering Installation.

(d) Testing and calibration of the POD Metering Installation shall be undertaken by an accredited laboratory approved by the Wheeling Parties in accordance with IEC 62052 and IEC 62053.

(e) Izuba shall ensure that a complete and accurate copy of each meter testing result is delivered to EUCL and the Customer within a period not exceeding ten (10) Days from its completion.

11.3 Measurement of Energy

(a) The Dashboard shall automatically and electronically measure the Energy delivered at the Point of Delivery in real-time, and shall provide a reading on the last Day of each Month in accordance with the Metering and Reconciliation Protocol. In the event of an unavailability or failure of the Dashboard, Izuba shall read the POD Main Metering Equipment on the

last Day of each Month for the purpose of measuring the Energy delivered at the Point of Delivery, and shall provide EUCL and the Customer with copies of each reading, in each case, in accordance with the Metering and Reconciliation Protocol.

(b) EUCL and the Customer shall have the right to have a representative present during any such reading (but the reading may be taken if EUCL and/or the Customer has no representative present). Izuba shall take and record such readings together with a photographic record thereof, and Izuba shall maintain a log of all such meter readings during the Term.

(c) Izuba shall at all times provide to EUCL and the Customer a real time data link to the POD Metering Installation and access to the SCADA system, with the specifications and parameters applicable to such real time data link to be agreed from time to time in the Metering and Reconciliation Protocol and, subject to clause 10.3, procure that the data produced by the POD Metering Installation is made available for the Dashboard.

(d) If the POD Main Metering Equipment is not in service as a result of maintenance, repairs or testing, or when the POD Main Metering Equipment is found to be inaccurate pursuant to clause 11.3(e), then, assuming the POD Check Metering Equipment is within the acceptable limits of accuracy as set out in clause 11.3(e), the readings taken from the POD Check Metering Equipment shall be used during the period that the POD Main Metering Equipment is not in service and the foregoing provisions of this clause 11.3 shall apply to the reading of the POD Check Metering Equipment.

(e) When, as a result of any test pursuant to clause 11.2, the POD Main Metering Equipment is found to be inaccurate by more than zero point two per cent (0.2%) or is otherwise functioning improperly, then the correct amount of Energy for the actual period during which inaccurate measurements were made, if any, shall be determined as follows:

(i) first, the readings of the POD Check Metering Equipment, if any, shall be utilized to calculate the correct amount of Energy, unless a test of such POD Check Metering Equipment reveals that the POD Check Metering Equipment is inaccurate by more than zero point two per cent (0.2%) or is otherwise functioning improperly;

(ii) if the POD Check Metering Equipment is not within the acceptable limits of accuracy as set out in clause 11.3(e)(i), or is otherwise functioning improperly, then Izuba, EUCL and the Customer shall prepare an estimate of the correct reading on the basis of all available information including deliveries of Energy during periods of similar operating conditions when the POD Main Metering Equipment was registering accurately;

(iii) if the Wheeling Parties cannot agree on the actual period during which inaccurate measurements were made, the period during which measurements are to be

adjusted shall be the shorter of (i) one half of the period from the most recent test of the POD Main Metering Equipment, or (ii) thirty (30) Days immediately preceding the test which found the POD Main Metering Equipment to be inaccurate; and

(iv) the difference between the previous payments by the Customer for the period of inaccuracy or improper functioning and the recalculated amount shall be offset against or added to the amount owing by the Customer in the next Invoice issued by EUCL under this Agreement, as appropriate.

(f) If the Wheeling Parties fail to agree upon any estimate pursuant to clause 11.3(e), then the matter may be referred by any Wheeling Party for dispute resolution in accordance with clause 19.1 and thereafter for determination by an Expert subject to clause 19.2, unless the value of the dispute exceeds USD 100,000.00, in which case such matter shall be referred to arbitration in accordance with clause 19.4.

11.4 Repair and Replacement of Meters

When any component of the POD Metering Installation is found to be outside acceptable limits of accuracy as set out in clause 11.3(e) or is otherwise not functioning properly, Izuba shall immediately, acting in accordance with Prudent Operating Practice and clause 11.2(d), repair, recalibrate or replace such component of the POD Metering Installation.

12 Metering at the Point of Withdrawal

12.1 Installation and ownership of POW Metering Installation

EUCL shall, at its expense, design, finance, procure, construct, install, calibrate, own, operate and maintain the POW Main Metering Installation in accordance with this Agreement, the Industry Documents and any applicable Laws of Rwanda.

12.2 Testing and inspection of POW Metering Installation

(a) EUCL shall inspect and test at its own expense the POW Main Metering Installation for accuracy at least once per Contract Year.

(b) With respect to each testing of the POW Main Metering Installation, EUCL shall give Izuba and the Customer no less than seven (7) Days' advance notice of such testing, and Izuba and/or the Customer may have a representative present during any such testing, as well as during any inspection of the POW Main Metering Installation or adjustment thereof (but the test, inspection or adjustment may be taken if Izuba and/or the Customer has no representative present if Izuba and the Customer were informed in accordance with this clause).

(c) Additional testing may be conducted, at any reasonable time upon request by Izuba and/or the Customer subject to Izuba and/or the Customer (as applicable) providing reasonable evidence of an inaccuracy of the POW Main Metering Installation. The additional testing shall be at Izuba and/or the Customer's (as applicable) expense, unless the test indicates that the POW Main Metering Installation is not within the accuracy limit specified in clause 12.3(e) or is otherwise functioning improperly, in which case EUCL shall bear the cost of the additional test in respect of the POW Main Metering Installation.

(d) Testing and calibration of the POW Metering Installation shall be undertaken by an accredited laboratory approved by the Wheeling Parties in accordance with IEC 62052 and IEC 62053.

(e) EUCL shall ensure that a complete and accurate copy of each meter testing result is delivered to Izuba and the Customer within a period not exceeding ten (10) Days from its completion.

12.3 Measurement of Energy

(a) The Dashboard shall automatically and electronically measure the Energy withdrawn at the Point of Withdrawal in real-time, and shall provide a reading on the last Day of each Month in accordance with the Metering and Reconciliation Protocol. In the event of an unavailability or failure of the Dashboard, EUCL or the Customer shall read the POW Main Metering Equipment on the last Day of each Month for the purpose of measuring the Energy delivered at the Point of Withdrawal, and shall provide Izuba and the Customer or EUCL with copies of each reading, in each case, in accordance with the Metering and Reconciliation Protocol.

(b) Izuba and the Customer shall have the right to have a representative present during any such reading (but the reading may be taken if Izuba and/or the Customer has no representative present). EUCL shall take and record such readings together with a photographic record thereof, and EUCL shall maintain a log of all such meter readings during the Term.

(c) EUCL shall at all times provide to Izuba and the Customer a real time data link to the POW Metering Installation, with the specifications and parameters applicable to such real time data link to be agreed from time to time in the Metering and Reconciliation Protocol. EUCL shall produce that the data collected by the POW Metering Installation is continuously fed into the Dashboard.

(d) If the POW Main Metering Equipment is not in service as a result of maintenance, repairs or testing, or when the POW Main Metering Equipment is found to be inaccurate pursuant to clause 12.3(e), then, assuming the POW Check Metering Equipment is within the acceptable limits of accuracy as set out in clause 12.3(e), the readings taken from the POW

Check Metering Equipment shall be used during the period that the POW Main Metering Equipment is not in service and the foregoing provisions of this clause 12.3 shall apply to the reading of the POW Check Metering Equipment.

(e) When, as a result of any test pursuant to clause 12.2, the POW Main Metering Equipment is found to be inaccurate by more than zero point two per cent (0.2%) or is otherwise functioning improperly, then the correct amount of Energy for the actual period during which inaccurate measurements were made, if any, shall be determined as follows:

(i) first, the readings of the POW Check Metering Equipment, if any, shall be utilized to calculate the correct amount of Energy, unless a test of such POW Check Metering Equipment, as required by a Wheeling Party, reveals that the POW Check Metering Equipment is inaccurate by more than zero point two per cent (0.2%) or is otherwise functioning improperly;

(ii) if the POW Check Metering Equipment is not within the acceptable limits of accuracy as set out in clause 12.3(e)(i), or is otherwise functioning improperly, then Izuba, EUCL and the Customer shall prepare an estimate of the correct reading on the basis of all available information including deliveries of Energy during periods of similar operating conditions when the POW Main Metering Equipment was registering accurately;

(iii) if the Wheeling Parties cannot agree on the actual period during which inaccurate measurements were made, the period during which measurements are to be adjusted shall be the shorter of (i) one half of the period from the most recent test of the POW Main Metering Equipment, or (ii) thirty (30) Days immediately preceding the test which found the POW Main Metering Equipment to be inaccurate; and

(iv) the difference between the previous amount invoiced by EUCL for the period of inaccuracy or improper functioning and the recalculated amount shall be offset against or added to the amount owing by the Customer in the next Invoice issued by EUCL under this Agreement, as appropriate.

(f) If the Wheeling Parties fail to agree upon any estimate pursuant to clause 12.3(e), then the matter may be referred by any Wheeling Party for dispute resolution in accordance with clause 19.1 and thereafter for determination by an Expert subject to clause 19.2, unless the value of the dispute exceeds USD 100,000.00, in which case such matter shall be referred to arbitration in accordance with clause 19.4.

12.4 Repair and Replacement of Meters

When any component of the POW Metering Installation is found to be outside acceptable limits of accuracy as set out in clause 12.3(e) or is otherwise not functioning properly, EUCL shall

immediately, acting in accordance with Prudent Operating Practice and clause 12.2(d), repair, recalibrate or replace such component of the POW Metering Installation.

13 Payment

13.1 Wheeling Charge; Withdrawn Energy

(a) The Customer shall pay to EUCL the Wheeling Charge in respect of the Metered Energy during each Month following the COD in accordance with this Agreement, as calculated in accordance with the terms and conditions set out in Schedule 1. Subject to clause 18.1, the Wheeling Charge shall, throughout the Term, remain as set out under Schedule 1.

(b) The compensation payable by the Customer to EUCL for EUCL supplying the Withdrawn Energy at the Point of Withdrawal shall be the Peak Period Excess Energy Payments and the Excess Energy Payments. In case there is a material increase in the Withdrawn Energy as set-out in clause 8.6, the Customer and the EUCL may enter into a separate arrangement for the compensation of such Withdrawn Energy. EUCL shall only be entitled to the payment of the Wheeling Charge for the Delivered Energy consumed at the Point of Withdrawal as set-out in Schedule 1. EUCL shall not be entitled to any payment for any Deemed Delivered Energy.

13.2 Grid Availability Shortfall Event

(a) If and to the extent, Izuba is prevented from delivering Energy to the Point of Delivery as a result of:

(i) any breach by EUCL of this Agreement or the Industry Documents, including any failure to provide the Wheeling Service in accordance with the terms hereof;

(ii) any disturbance on or unavailability of the Grid; and/or

(iii) the Generating Facility not being dispatched in accordance with Izuba's availability declaration,

(each a **Grid Availability Event**) in each case, howsoever caused, then, if over such Electricity Period the Grid failed to achieve the Guaranteed Grid Availability, it shall be a **Grid Availability Shortfall Event**, except where such event or circumstance:

(iv) is caused by a Force Majeure Event affecting Izuba which is a Natural Force Majeure Event;

(v) is caused by a Force Majeure Event affecting EUCL which is a Natural Force Majeure Event, provided that if EUCL does not restore the Grid and otherwise resume performance of its obligations under this Agreement within fifteen (15)

Business Days from the date of cessation of the Natural Force Majeure Event then this exclusion shall no longer apply beyond this fifteen (15) Business Day period following the date of cessation of the Natural Force Majeure Event;

(vi) is caused by a Force Majeure Event affecting EUCL which is a GoR Risk Event; or

(vii) has been contributed to (wholly or partly) by a breach by Izuba of this Agreement or the Industry Documents or the Laws of Rwanda.

(b) EUCL warrants the Guaranteed Grid Availability at the Point of Delivery and the Point of Withdrawal.

(c) Following a request from Izuba or the Customer, EUCL shall by written notice to Izuba and the Customer, confirm the occurrence of a Grid Available Shortfall Event and the associated quantity of Deemed Delivered Energy.

13.3 Payment and Billing

(a) EUCL Invoices

In respect of each Month during which the Wheeling Service is provided, EUCL shall prepare in accordance with the Metering and Reconciliation Protocol and within five (5) Business Days following the end of that Month deliver to the Customer (with a copy delivered to Izuba) an Invoice in RWF in the form specified under Schedule 5 together with its corresponding receipt generated by electronic billing system approved by the Rwanda tax administration, which shall:

(i) include calculations, in reasonable detail, of

(A) on a Monthly basis:

(1) amounts owed by the Customer to EUCL for Wheeling Charges and the exchange rate conversion from USD to RWF pursuant to clause 13.3(b);

(2) amount owed by the Customer to EUCL for Low Power Factor Surcharge penalties calculated in accordance with Schedule 5 of this Agreement;

(3) amounts owed by the Customer to EUCL for the Peak Period Excess Energy Payments (if any); and

(4) any other amounts owed in accordance with this Agreement and/or the Laws of Rwanda; and

(B) where the relevant Month is either December or June of any year (or the start of an Electricity Period), amounts owed by the Customer to EUCL for Excess Energy Payment (if any) in respect of the Electricity Period in which the relevant Month falls; and

(ii) state all amounts owed in RWF,

(iii) with the Wheeling Charges converted from USD to RWF pursuant to clause 13.3(b); include VAT, sales or other tax which EUCL is obliged to charge to/collect from the Customer; and

(iv) include such supporting information as may reasonably be necessary to substantiate the amounts claimed in the invoice.

(b) The Customer shall pay the full amount of each Invoice in RWF by the Invoice Due Date. In preparing the Invoice, EUCL shall convert the USD amount of the Wheeling Charges into RWF basing on the midday selling rate as per the exchange published by the National Bank of Rwanda as at the date of the Invoice.

(c) Each payment to be made under or in connection with this Agreement shall be made in full, without any set-off or deduction, save as required by the Laws of Rwanda or permitted by clause 13.3(g).

(d) Subject to clause 13.3(f), if any Wheeling Party makes a payment pursuant to this Agreement and is required by the Laws of Rwanda to make a deduction from such payment, the amount payable to the payee shall be increased to the extent necessary to ensure that, after such deduction has been made, the payee receives a net sum equal to the amount that it would have received had no such deduction been required.

(e) If a Wheeling Party has received an increased payment from any other Wheeling Party under clause 13.3(e) and the payee has received or subsequently receives a credit against, relief or remission for Tax payable by it, or any repayment of Tax (a **Credit**), the payee shall, acting reasonably establish the amount (if any) which, as a result of such Credit, it is able to repay to the paying Wheeling Party without putting itself in a worse position than if no deduction had been required and shall pay such amount (if any) to the paying Wheeling Party within a period not exceeding sixty (60) Days from the date of discovery of receipt of such increased payment by the payee.

(f) Any payment which is not paid by the Invoice Due Date shall bear interest at the Default Rate.

(g) If EUCL or the Customer (the **Paying Party**) disputes any portion of an Invoice, then the Paying Party shall serve a notice on the other Wheeling Parties on or before the Invoice Due Date. Such notice shall indicate the amount of the dispute and the basis thereof.

(i) In the event such notice is served on or before the seventeenth (17th) Business Day after the date of receipt of the Invoice, the Party that issued the Invoice (the **Receiving Party**) shall then reissue the Invoice for the undisputed portion within five (5) Business Days of such notice. The reissued Invoice shall be accompanied by (x) a letter stating that the reissued Invoice cancels out the original Invoice and (y) the Rwanda Electronic Billing Machine-generated (the **EBM**) receipt to evidence that the original Invoice has been cancelled in order to correctly reflect taxation on the undisputed portion of the Invoice. Such letter and the reissued Invoice shall be submitted as one PDF document. The Paying Party shall pay the undisputed amount to the Receiving Party by the original Invoice Due Date.

(ii) In the event such notice is served on or before the Invoice Due Date and after the eighteenth(18th) Business Day after the date of receipt of the Invoice, the Paying Party shall pay the full Invoice amount to the Receiving Party by the Invoice Due Date. The Receiving Party shall deduct the disputed amount from the next Invoice(s).

The Paying Party shall not be required to pay the disputed amount until such dispute is resolved by an Expert subject to clause 19.2, unless the amount in dispute exceeds USD100,000.00, in which case such matter shall be referred to arbitration in accordance with clause 19.4. If it is determined by an Expert or through arbitration that the Paying Party owes an amount of money to the Receiving Party, the Paying Party shall, within ten (10) Days after the receipt of such determination, pay such sum together with interest thereon at the Default Rate from the date the Paying Party should have paid such sum to the Receiving Party.

(h) If a dispute notice is not issued pursuant to clause 13.3(g), and the relevant Invoice is paid by the Paying Party, neither the Paying Party or the Receiving Party shall be entitled to require an adjustment to any amount paid under such Invoice after the expiry of five (5) years after the relevant payment. If a Paying Party wishes to dispute such paid Invoice it shall do so by sending a written notice to the Receiving Party within the above term.

(i) In case EUCL considers the Customer to be in default with any undisputed payment obligation, EUCL shall not suspend or curtail the delivery of electricity to the Point of Withdrawal without sending a written notice to the Customer giving the Customer not less than forty-five (45) days to clarify and/or pay the respective sum.

13.4 Supporting Data

Each Wheeling Party shall maintain accurate and complete records and data, as reasonably necessary to calculate or confirm the correctness of any amount invoiced by that Wheeling Party under this Agreement and for the purposes of the Bi-Annual Reconciliation and Peak Period Reconciliation. All such records and data shall be maintained for a period of not less than sixty (60) Months following the last date on which such data and information was relevant.

14 Indemnification and liability

14.1 Indemnity by EUCL

Subject to clause 14.5, EUCL shall indemnify Izuba and the Customer (as applicable) against, and hold Izuba and the Customer (as applicable) harmless from, any and all losses, and any and all actions, claims and demands in respect of such losses, incurred, suffered, sustained, or required to be paid, directly or indirectly, by, or sought to be imposed upon, Izuba and the Customer (as applicable):

(a) related to EUCL's violation of the Laws of Rwanda or the Industry Documents; or

(b) related to EUCL's breach of any of its obligations or representations and warranties under this Agreement.

14.2 Indemnity by Izuba and the Customer

Subject to clause 14.5, Izuba and the Customer (as applicable) shall indemnify EUCL against, and hold EUCL harmless from, at all times after the date hereof, any and all losses, and any and all actions, claims and demands in respect of such losses, incurred, suffered, sustained, or required to be paid, directly or indirectly, by, or sought to be imposed upon, EUCL:

(a) related to Izuba or the Customer's (as applicable) violation of the Laws of Rwanda or the Industry Documents; or

(b) related to Izuba or the Customer's (as applicable) breach of any of its obligations or representations and warranties under this Agreement.

14.3 Joint Negligence

If injury or damage results from the joint or concurrent negligent or intentional acts or omissions of the Wheeling Parties, each Wheeling Party shall be liable under this indemnification in proportion to its relative degree of fault.

14.4 Notice of proceedings

Each Wheeling Party shall promptly notify the other Wheeling Parties of any claim or proceeding in respect of which, but for the provisions of clause 14.5, it is entitled to be indemnified under this

clause. Such notice shall be given as soon as reasonably practicable after the relevant Wheeling Party becomes aware of such claim or proceeding.

14.5 Basket limitation

No Wheeling Party shall be entitled to make any claim under this clause 14 to the extent such Wheeling Party has been compensated by its insurance in respect of the subject matter of such claim.

14.6 Conduct of proceedings

(a) Each Wheeling Party shall have the right, but not the obligation, to contest, defend and litigate (and to retain legal advisers of its choice in connection therewith) any claim, action, suit or proceeding by any third party alleged or asserted against it arising out of any matter in respect of which it is entitled to be indemnified hereunder, and the reasonable costs and expenses thereof shall be subject to the said indemnity.

(b) Notwithstanding the above, the indemnifying Wheeling Party shall be entitled, at its option, to assume and control the defence of such claim, action, suit or proceeding at its expense and through legal advisers of its choice if it:

(i) gives notice of its intention to do so to the other Wheeling Parties;

(ii) acknowledges in writing its obligation to indemnify the other Wheeling Parties to the full extent provided by this clause 14; and

(iii) reimburses the other Wheeling Parties for the reasonable costs and expenses previously incurred by it prior to the assumption of such defence by the indemnifying Wheeling Party.

(c) No Wheeling Party shall settle or compromise any claim, action, suit or proceeding in respect of which it is entitled to be indemnified by any other Wheeling Party without the prior written consent of that Wheeling Party; provided always that after agreeing in writing to indemnify the indemnified Wheeling Party, the indemnifying Wheeling Party may settle or compromise any such claim, action, suit or proceeding without the approval of the indemnified Wheeling Party.

14.7 Consequential losses

Except as expressly provided in this Agreement, no Wheeling Party shall be liable to the other in contract, tort, warranty, strict liability or any other legal theory for any indirect, consequential, incidental, punitive or exemplary losses or damages. Any losses or damages incurred by Izuba in relation to the Customer or any other corporate offtaker which is reliant on the Wheeling Service

shall not be considered to be indirect, consequential, incidental, punitive or exemplary losses or damages and shall therefore constitute Direct Losses.

14.8 Mitigation

A Wheeling Party suffering any cost, expense, loss or damage for which the other Wheeling Party may ultimately be liable shall take all reasonable steps to mitigate the same, and any claim brought shall be subject to any defence or counterclaim of the other Wheeling Party at law.

14.9 Exclusive remedies

Each Wheeling Party's express entitlement to remedies under this Agreement shall be the sole and exclusive remedies of such Wheeling Party (and the other Wheeling Party's sole and exclusive liability) in respect of any failure, breach or other liability under this Agreement, and shall be to the exclusion of all other remedies each Wheeling Party may have, whether in contract, tort (including negligence or breach of any statutory duty), under statute, or otherwise.

15 Force majeure

15.1 Force Majeure Events shall not include any event caused by:

(a) the negligence or intentional action, errors or omissions of the Affected Party, or the Affected Party's failure to comply with any Laws of Rwanda, the Industry Documents or its breach of or default under this Agreement or any other agreement relating to the Project;

(b) the economic hardship of the Affected Party or changes in market conditions (unless in respect of Izuba or the Customer if caused by a Change in Law);

(c) normal wear and tear or inherent flaws in materials and equipment or breakdowns of equipment;

(d) delay or failure to perform by a contractor, vendor and/or supplier (except where such delay or failure itself arises from a Force Majeure Event); or

(e) inability to make a payment of money in accordance with this Agreement.

15.2 Notification and obligation to remedy

Upon the occurrence of a Force Majeure Event, the Affected Party shall:

(a) notify as soon as reasonably practicable but no longer than five (5) Business Days after becoming aware of the Force Majeure Event (or as soon as reasonably practicable after the resumption of any means of providing notice between the Parties) the other Wheeling Parties in writing of such Force Majeure Event, providing a preliminary evaluation of the

obligations affected, a preliminary estimate of the period of time that the Affected Party will be unable to perform the obligations, and any other relevant matters as soon as practicable;

(b) not be entitled to suspend performance under this Agreement for any greater scope or longer duration than is required by the Force Majeure Event or until giving notice as provided in clause 15.2(a);

(c) use all reasonable endeavours to remedy and mitigate the effects of the Force Majeure Event on its ability to perform and to resume full performance hereunder as soon as practicable;

(d) keep such other Wheeling Parties apprised of such efforts on a regular basis;

(e) provide written notice of the cessation of the Force Majeure Event as soon as practicable; and

(f) thereafter, resume performance hereunder.

15.3 Consequences of a Force Majeure Event

(a) Subject to delivery of notice as required by clause 15.2(a):

(i) no Wheeling Party shall be responsible or liable for, or deemed in breach hereof because of, any failure or delay in complying with its obligations under this Agreement which it cannot perform due solely to one or more Force Majeure Events or its or their effects or by any combination thereof, provided that no Wheeling Party shall be relieved from its obligation to make a payment when due and payable in accordance with this Agreement; and

(ii) the periods allowed for the performance by the Wheeling Parties of such obligation(s) (and any milestone dates) shall be extended on a day-for-day basis for so long as one or more Force Majeure Events continue(s) to affect the performance of the Affected Party of such obligation(s) under or pursuant to this Agreement, and for so long as the Affected Party is using all reasonable endeavours to remedy its inability to perform and resume full performance.

(b) Notwithstanding clause 15.3(a), the Wheeling Parties shall perform their obligations under this Agreement to the extent the performance of such obligations is not impeded by the Force Majeure Event, and no relief shall be granted to the Affected Party pursuant to this clause 15.3 to the extent that such failure or delay would have nevertheless occurred in the absence of a Force Majeure Event.

15.4 Prolonged Natural Force Majeure Events

If a Force Majeure Event which is a Natural Force Majeure Event has occurred and has continued for a consecutive period of at least three hundred and sixty five (365) Days, any Wheeling Party may terminate this Agreement by giving thirty (30) Days' written notice to all other Wheeling Parties, whereupon no Wheeling Party shall have any further obligations or liabilities to any other Wheeling Party save in respect of those accruing prior to termination.

16 Taxes

All Taxes arising from or in connection with the Wheeling Service shall be paid by the Customer in a timely fashion and in accordance with the applicable Laws of Rwanda.

17 Default and termination

17.1 Izuba Events of Default

Each of the following events shall be events of default by Izuba (each a **Izuba Event of Default**) which, if not cured within the Cure Period and in accordance with clause 17.4, shall give rise to the right on the part of EUCL to terminate this Agreement pursuant to clause 17.5:

(a) except for the purpose of amalgamation, reorganization or reconstruction (provided that such amalgamation, reorganization or reconstruction does not affect the ability of the amalgamated, reorganized or reconstructed entity, as the case may be, to perform its obligations under this Agreement), the occurrence of any of the following events:

(i) the passing of a resolution by the owners of Izuba for the winding up of Izuba;

(ii) the admission in writing by Izuba of its inability generally to pay its debts as they become due;

(iii) the appointment of a receiver, trustee, administrator, liquidator or similar person in relation to Izuba or any of its assets after notice to Izuba and due hearing; or

(iv) the making by a court with competent jurisdiction over Izuba of an order winding up Izuba;

(b) the assignment or transfer of this Agreement or any rights or obligations hereunder otherwise than pursuant to clause 20;

(c) any representation or warranty made or deemed to be repeated by Izuba under this Agreement is or proves to have been incorrect or misleading in any material respect when made or deemed to have been repeated, and such incorrect or misleading representation or warranty has a material adverse effect on either Party's ability to perform its obligations under this Agreement;

(d) failure by Izuba to perform any of its material obligations under this Agreement (other than a material obligation which is the subject of a separate Izuba Event of Default in this clause 17.1);

(e) failure by Izuba to meet the Minimum Generating Facility Availability for two consecutive years;

(f) a breach of the obligations set out in clauses 24.13(a) or 24.13(b)

except that none of the events described above in clauses 17.3(a) to 17.1(f) (inclusive) shall be a Izuba Event of Default hereunder if it (i) results from a breach by EUCL or the Customer of this Agreement or (ii) occurs as a result of a Force Majeure Event.

17.2 EUCL Events of Default

Each of the following events shall be events of default by EUCL (each a **EUCL Event of Default**), which, if not cured within the Cure Period (if applicable) and in accordance with clause 17.4, shall give rise to the right on the part of Izuba to terminate this Agreement pursuant to clause 17.5:

(a) EUCL is dissolved, declared insolvent, wound up or otherwise ceases to exist or function, except for the purpose of amalgamation, reorganization or reconstruction (provided that such amalgamation, reorganization or reconstruction does not affect the ability of the amalgamated, reorganized or reconstructed entity, as the case may be, to perform its obligations under this Agreement, and this Agreement remains in full force and effect);

(b) the assignment or transfer of this Agreement or an assignment, transfer or acquisition in breach of clause 20;

(c) any representation or warranty made or deemed to be repeated by EUCL under this Agreement is or proves to have been incorrect or misleading in any material respect when made or deemed to have been repeated, and such incorrect or misleading representation or warranty has a material adverse effect on either Party's ability to perform its obligations under this Agreement;

(d) failure by EUCL to perform any of its material obligations under this Agreement (other than a material obligation which is the subject of a separate EUCL Event of Default in this clause 17.2); or

(e) a breach of the obligations set out in clauses 24.13(a) or 24.13(b);

except that none of the events described above in clauses 17.2(a) to 17.2(e) (inclusive) shall be a EUCL Event of Default hereunder if (i) it results from a breach by Izuba or the Customer of this Agreement; or (ii) it occurs as a result of a Force Majeure Event.

17.3 Customer Events of Default

Each of the following events shall be events of default by the Customer (each a **Customer Event of Default**) which, if not cured within the Cure Period and in accordance with clause 17.4, shall give rise to the right on the part of EUCL to terminate this Agreement pursuant to clause 17.5:

(a) any failure by the Customer to make any undisputed payment to be made by it under this Agreement within thirty (30) Days after the Customer is given notice that the payment was not made by the Invoice Due Date or other due date for payment;

(b) except for the purpose of amalgamation, reorganization or reconstruction (provided that such amalgamation, reorganization or reconstruction does not affect the ability of the amalgamated, reorganized or reconstructed entity, as the case may be, to perform its obligations under this Agreement), the occurrence of any of the following events:

(i) the passing of a resolution by the owners of the Customer for the winding up of the Customer;

(ii) the admission in writing by the Customer of its inability generally to pay its debts as they become due;

(iii) the appointment of a receiver, trustee, administrator, liquidator or similar person in relation to the Customer or any of its assets after notice to the Customer and due hearing; or

(iv) the making by a court with competent jurisdiction over the Customer of an order winding up the Customer;

(c) the assignment or transfer of this Agreement or any rights or obligations hereunder otherwise than pursuant to clause 20;

(d) any representation or warranty made or deemed to be repeated by the Customer under this Agreement is or proves to have been incorrect or misleading in any material respect when made or deemed to have been repeated, and such incorrect or misleading representation or warranty has a material adverse effect on a Party's ability to perform its obligations under this Agreement;

(e) failure by the Customer to perform any of its material obligations under this Agreement (other than a material obligation which is the subject of a separate Customer Event of Default in this clause 17.3);

(f) a breach of the obligations set out in clauses 24.13(a) or 24.13(b)

except that none of the events described above in clauses 17.3(a) to 17.1(f) (inclusive) shall be a Customer Event of Default hereunder if it (i) results from a breach by EUCL or Izuba of this Agreement or (ii) occurs as a result of a Force Majeure Event.

17.4 Notice and Cure

Upon the occurrence of an Event of Default which is continuing, the non-defaulting Wheeling Party or Wheeling Parties may give an Event of Default Notice to the defaulting Wheeling Party. The defaulting Wheeling Party shall (subject to the Direct Rights) have the Cure Period to cure (or, if incapable of cure, to mitigate the effects of) the Event of Default. The defaulting Wheeling Party shall furnish to the non-defaulting Wheeling Parties during any Cure Period weekly reports on its progress in curing the Event of Default. During any Cure Period following the Event of Default Notice, the Wheeling Party in default may continue to undertake efforts to cure the default, and if the default is cured at any time prior to the delivery of a Notice of Termination sent in accordance with clause 17.5, then the non-defaulting Wheeling Party or Wheeling Parties shall have no right to terminate this Agreement in respect of such cured default.

17.5 Rights and remedies upon an Event of Default

(a) Izuba Event of Default

If an Izuba Event of Default occurs and is not cured within the Cure Period specified in clause 17.4, if any, EUCL or the Customer, in its sole discretion may (subject to the Direct Rights) terminate this Agreement by delivering a Notice of Termination to Izuba and the other Wheeling Party, whereupon this Agreement shall terminate on the date specified for termination in the Notice of Termination (or such later date as the Wheeling Parties agree) and EUCL shall calculate and invoice Izuba in respect of, and Izuba shall compensate EUCL for, its Direct Losses (if any) on or before the Invoice Due Date.

(b) EUCL Event of Default

If an EUCL Event of Default occurs and is not cured within the Cure Period specified in clause 17.4, if any:

(i) Izuba or the Customer, in their sole discretion, may terminate this Agreement by delivering a Notice of Termination to EUCL (with a copy to the other Wheeling Party), whereupon this Agreement shall terminate on the date specified for termination in the Notice of Termination (or such later date as the Wheeling Parties agree); and

(ii) Izuba may require EUCL to purchase the Generating Facility upon notice to EUCL in return for payment by EUCL of the Generating Facility Buy-out Price and upon receipt of such notice, Izuba and EUCL shall comply with the process set out in Schedule 12, and EUCL shall pay the Generating Facility Buy-out Price to Izuba on

or before the Invoice Due Date. Following payment by EUCL of the Generating Facility Buy-out Price Izuba shall transfer the Generating Facility to EUCL or its nominee (which may be EDCL). For the avoidance of doubt, Izuba shall not be able to require EUCL to purchase the Generating Facility pursuant to this clause 17.5(b)(ii) where Izuba has already sold the Generating Facility to another third party on a willing buyer, willing seller basis.

(c) Customer Event of Default

If a Customer Event of Default occurs and is not cured within the Cure Period specified in clause 17.4, if any, EUCL, in its sole discretion may terminate this Agreement by delivering a Notice of Termination to the Customer, whereupon this Agreement shall terminate on the date specified for termination in the Notice of Termination (or such later date as EUCL and the Customer agree) and EUCL shall calculate and invoice the Customer in respect of, and the Customer shall compensate EUCL for, its Direct Losses (if any) on or before the Invoice Due Date.

17.6 Other termination events

(a) In the event that one of the events described above in clauses 17.2(a) to 17.2(e) (inclusive) occurs as a result of a Force Majeure Event which is a GoR Risk Event, either Izuba or the Customer may terminate this Agreement by giving thirty (30) Days' written notice to all other Wheeling Parties, whereupon no Wheeling Party shall have any further obligations or liabilities to any other Wheeling Party save in respect of those accruing prior to termination.

(b) In the event the Power Purchase Agreement is terminated as a result of a Buyer Event of Default (as that term is defined in the PPA), Izuba may terminate this Agreement at any time upon providing thirty (30) Days' written notice to EUCL. Following receipt of such notice, EUCL shall if requested by Izuba or the Customer use reasonable endeavours to negotiate in good faith and enter into a replacement wheeling agreement directly with the Customer which is substantially in the form of this Agreement with all necessary changes.

(c) In the event that the Power Purchase Agreement is terminated as a result of a Seller Event of Default (as that term is defined in the PPA):

(i) the Customer may provide notice that it wishes to perform the obligations and exercise the rights of Izuba under this Agreement, in which case the Wheeling Parties agree that:

(A) the Customer and EUCL shall within thirty (30) Days' of such Customer notice, enter into a Wheeling Agreement on the same terms as this Agreement (unless otherwise agreed pursuant to EUCL and the Customer at the time)

provided that references to Izuba shall be amended to refer to the Customer and references to Wheeling Party will be amended to refer to the Party; and

(B) this Agreement will automatically terminate thirty (30) Days' after receipt by EUCL and Izuba of the Customer's written notice pursuant to this clause 17.6(c)(i); or

(ii) where the Customer has not provided a notice pursuant to clause 17.6(c)(i) above within thirty (30) Days' of the date of termination of the PPA, Izuba may terminate this Agreement at any time upon providing thirty (30) Days' written notice to EUCL.

(d) In the event that the Power Purchase Agreement is terminated for any reason other than a Buyer Event of Default or a Seller Event of Default (as such terms are defined in the PPA), Izuba or the Customer may terminate this Agreement at any time upon providing thirty (30) Days' written notice to the other Wheeling Parties.

18 Change in Law

18.1 Without prejudice to the provisions of this Agreement governing a Change in Law which is a Force Majeure Event, upon the occurrence of a Change in Law (except for a Change in Law which relates to a change in law relating to Taxes to which this clause shall not be applicable) the following provisions will apply:

(a) if any Wheeling Party considers that the Change in Law has had an adverse effect on it or on this Agreement, it may notify the other Wheeling Parties identifying the Change in Law and provide evidence that demonstrates to the other Wheeling Parties' reasonable satisfaction that such Change in Law has had an adverse impact on that Wheeling Party or on this Agreement; and

(b) the Wheeling Parties will negotiate in good faith any amendments that may be required to preserve the intent of this Agreement. The provisions contemplated by this clause shall not entitle the Customer to any adjustment of the Wheeling Charge or financial compensation from EUCL, unless the Change in Law specifically determines the Wheeling Charge.

18.2 Dispute

If the Wheeling Parties fail to agree on such amendments (or that a Change in Law has occurred) within sixty (60) Days of first written notice regarding such Change in Law provided in accordance with the provisions of this Agreement, then any Wheeling Party may refer the matter to an Expert for determination (which shall be binding in the absence of fraud or manifest error), whereas in case the value of the Change in Law's impact on a Wheeling Party in connection with the Agreement exceeds USD 100,000.00, each Wheeling Party may refer such matter to arbitration

in accordance with clause 19.4. Any Expert's determination under clause 19.3 shall be deemed to apply on and from the date of such event.

19 Resolution of disputes

19.1 Mutual Discussions

If a Dispute arises, the Wheeling Parties shall attempt in good faith to settle such Dispute in the first instance within thirty (30) Days by mutual discussions between authorised representatives of each Wheeling Party. The Wheeling Parties shall commence such discussions within five (5) Business Days of a written request by any Wheeling Party.

19.2 Formal Dispute Resolution Procedures

(a) In the event that the Wheeling Parties are unable to resolve a Dispute by informal discussions in accordance with clause 19.1 and such Dispute is designed to be referred to an Expert in accordance with the provisions of this Agreement or is a technical or payment Dispute and the amount in or value of the dispute does not exceed 100,000.00 USD, then the Dispute shall be resolved by referral to an Expert in accordance with clause 19.3, subject to clauses 19.2(d), 19.2(e) and 19.2(f).

(b) The Expert shall give its decision to the Wheeling Parties in writing and his decision, which shall promptly be given effect by the Wheeling Parties. The decision of the Expert shall be final and binding, save in the event of fraud, undisclosed bias, conflict of interest or manifest error in which case a Wheeling Party may refer the matter to arbitration in accordance with clause 19.4 within two (2) Months of both Parties' receipt of the Expert's final decision provided that such Party has notified the other Party of its intention to refer the matter to arbitration within twenty-five (25) Business Days of both Parties' receipt of the Expert's final decision. For the avoidance of doubt: Each Wheeling Party may take measures required to enforce an Expert decision once binding including the initiation of arbitration.

(c) If the Expert has not submitted its recommendation to the Wheeling Parties within any time period provided in clause 19.3 then any Wheeling Party may refer the Dispute for resolution in accordance with the procedures described in clause 19.4.

(d) In the event that the Wheeling Parties are unable to resolve a Dispute by informal discussions in accordance with clause 19.1 and such Dispute is not a technical or payment Dispute, then the Dispute shall be resolved in accordance with clause 19.4.

(e) The Wheeling Parties may, through mutual agreement, elect to resolve any Dispute in accordance with clause 19.4.

(f) In case the Parties disagree on the contractual interpretation of this Agreement or any Laws of Rwanda, determination by an Expert shall not apply and subject to clause 19.1, the Wheeling Parties may refer such Dispute to a be resolved in accordance with clause 19.4.

19.3 Referral to an Expert for Disputes

(a) In the event of a Dispute subject to resolution by an Expert in accordance with clause 19.2 the Wheeling Parties agree to refer the Dispute to the Expert for determination in accordance with this clause 19.3.

(b) The Expert shall be generally recognised as an expert in the field/fields of expertise relevant to the Dispute and shall not be an agent, employee, or contractor or a former agent, employee, or contractor of any Wheeling Party involved in, and shall otherwise have no interest in, the Dispute.

(c) The Wheeling Party specified in the relevant provision as having the right (or any Wheeling Party if no single Wheeling Party is so specified) may give a Notice of Intention to Refer to the other Wheeling Party.

(d) A Notice of Intention to Refer shall include:

(i) a detailed description of the Dispute;

(ii) the proposed Expert to appoint;

(iii) proposal terms of reference to provide to the Expert;

(iv) all written material which the Applicant proposes to submit to the Expert as supporting evidence; and

(v) a statement of the relief claimed.

(e) If within ten (10) Business Days after service of a Notice of Intention to Refer, the Wheeling Parties have agreed on an Expert the Dispute shall be so referred.

(f) If the Wheeling Parties are unable within ten (10) Business Days after service of a Notice of Intention to Refer to agree upon an Expert, then any Wheeling Party may request for all Disputes, the Chairman of the Standing Committee of the International Chamber of Commerce (ICC) International Centre for Expertise to appoint an Expert, and the terms of reference of such Expert's appointment.

(g) Prior to appointment the Expert shall agree with the Wheeling Parties, in writing, his terms of engagement, including fee rates and shall sign a declaration to the effect that there are

no circumstances known to him that are likely to give rise to justifiable doubts as to his independence or impartiality.

(h) Except to the extent that the Wheeling Parties agree otherwise, the Expert shall determine the procedure of the expert determination, including, if he considers it necessary, nominating a time and place in Kigali for a hearing of the Wheeling Parties on the Dispute, which time shall not be more than twenty (20) Days after the Expert's appointment.

(i) Each Wheeling Party shall designate one person knowledgeable about the issues in dispute who shall be available to the Expert to answer questions and provide any additional information requested by the Expert. Except for such person, a Wheeling Party shall not be required to, but may, provide oral statements or presentations to the Expert or make any particular individuals available to the Expert.

(j) The Expert must render his decision on the Dispute in writing and as soon as possible after completion of the hearing and must forthwith advise the Wheeling Parties in writing of his determination and his reasons therefor (or if a hearing does not take place as soon as possible after all written submissions have been made).

(k) The proceedings shall be confidential, save in relation to enforcement, and any evidence given or statements made in the course of the hearing may not be used against a Wheeling Party in any other proceedings and may only be disclosed if required by law or for disclosure to advisers (on the basis that such parties are subject to the same confidentiality).

(l) The proceedings shall not be regarded as an arbitration and the laws relating to commercial arbitrations shall not apply.

(m) Once a Dispute is referred to an Expert, the Expert may shorten any of the time periods required by this clause 19.3 if, in the Expert's reasonable judgement, the Dispute requires expeditious resolution.

(n) If the Expert does not render a decision within a period of thirty (30) Days of his appointment or such longer or shorter period as the Wheeling Parties may agree in writing, any Wheeling Party may, upon giving notice to the other, terminate such appointment, and a new Expert shall be appointed in accordance with this clause 19.3 who shall resolve the Dispute in accordance with the provisions of this clause 19.3.

(o) If the Expert shall die or become unwilling or become incapable of acting or determines that he is no longer independent, the Wheeling Parties shall appoint a new Expert in accordance with this clause 19.3.

(p) The fees of the Expert and any other costs of and incidental to the reference to Expert determination shall be payable by such Wheeling Party to the Dispute as the Expert may determine.

(q) The Wheeling Parties shall co-operate with the Expert and comply with his reasonable requests made in connection with the Dispute.

19.4 Arbitration

(a) Any Dispute arising out of or in connection with this Agreement that has not been resolved following the procedures set out in clause 19.1 and is subject to arbitration in accordance with this clause 19.4, shall be referred to arbitration and finally settled in accordance with the Rules. The Rules are deemed incorporated into this Agreement and the Wheeling Parties hereby consent to arbitration thereunder.

(b) In any arbitration conducted pursuant to clause 19.4(a):

(i) the number of arbitrators shall be three, to be appointed in accordance with the Rules. All three arbitrators shall not be citizens of any jurisdiction in which any Wheeling Party or their shareholder entity is incorporated;

(ii) the seat of arbitration shall be Kigali, Rwanda ; and any arbitration hearing or other arbitration proceeding, shall also be conducted in Kigali, Rwanda;

(iii) Arbitration proceedings shall be administered in accordance with the Rules by the Kigali International Arbitration Center (KIAC) as appointing authority under the Rules. For the avoidance of doubt, the appointment of arbitrators shall be undertaken by the Parties in accordance with the Rules and the appointing authority shall only act as a fallback mechanism;

(iv) the governing law of the arbitration agreement shall be the law of Rwanda; and

(v) the language to be used in the arbitral proceedings shall be English.

(c) The Wheeling Parties undertake as a general principle to keep confidential all awards and orders in the arbitration, as well as all materials created for the purpose of the arbitration and documents produced by another party in the arbitration not otherwise in the public domain, save and to the extent that a disclosure may be required of a Wheeling Party by legal duty, to protect or pursue a legal right or to enforce or challenge an award in bona fide legal proceedings before a state court or other judicial authority.

(d) Every Wheeling Party hereby agrees to be bound by any final decision or award of any arbitrators duly appointed under this Agreement.

(e) Except as awarded by the arbitrators, each Wheeling Party shall be responsible for its own costs incurred by it in connection with an arbitration hereunder and waive any right to refer any question of law and any right of appeal on the law and/or the merits to any national court.

19.5 Continued Performance

During the pendency of any Dispute being handled in accordance with this clause 19:

(a) EUCL shall continue to perform its obligations under this Agreement, including the delivery of the Wheeling Service, and supply of Energy to the Customer under clause 8.4 of this Agreement;

(b) Izuba and/or the Customer shall continue to perform its obligations under this Agreement, including to pay all amounts due in accordance with clause 13 that are not in dispute; and

(c) no Wheeling Party shall exercise any other remedies hereunder arising by virtue of the matters in dispute.

19.6 Waiver of sovereign immunity

EUCL unconditionally and irrevocably:

(a) agrees that the execution, delivery and performance by it of this Agreement constitute private and commercial acts;

(b) agrees that, should any legal proceedings be brought against it or its assets in relation to this Agreement or any transaction contemplated by this Agreement, no immunity (sovereign or otherwise) from such legal proceedings shall be claimed by or on behalf of itself or its assets, to the maximum extent permitted by law;

(c) to the maximum extent permitted by law, waives any such right of immunity (sovereign or otherwise) which its assets now have or may acquire in the future; and

(d) consents generally in respect of the enforcement of any judgment against it in any such proceedings or to the giving of any relief or the issue of any process in connection with such proceedings including, without limitation, to the maximum extent permitted by law, the making, enforcement or execution against or in respect of any property whatsoever (irrespective of its use or intended use) of any order or judgment which may be made or given in such proceedings.

20 Assignment

20.1 Izuba may charge or assign by way of security its interest hereunder to a Lender or any other person in connection with the exercise of security rights of the Lender or to any provider of political risk insurance or a guarantee facility of which that party is a beneficiary.

20.2 Except as set out in clause 20.1, this Agreement shall not be assigned by Izuba to any other party without the prior written consent of EUCL (not to be unreasonably withheld or delayed).

20.3 This Agreement shall not be assigned by EUCL to any other party without the prior written consent of Izuba and the Customer (not to be unreasonably withheld or delayed) except where EUCL evidences, to the reasonable satisfaction of Izuba and the Customer, that the transferee is licensed under Applicable Law to carry out transmission and distribution activities in Rwanda.

20.4 Unless otherwise stated under this Agreement, this Agreement shall not be assigned, novated or transferred by the Customer to any other party without the prior written consent of Izuba and EUCL (not to be unreasonably withheld or delayed) except where the Customer evidences, to the reasonable satisfaction of the other Wheeling Parties, that the transferee has the ability to perform and discharge all the Customer's obligations and liabilities under the Agreement.

20.5 This Agreement shall bind and inure to the benefit of the Parties or Wheeling Parties in accordance with clause 1.2(a) and any successor or assignee acquiring an interest hereunder consistent with clause 20.1, clause 20.3 and clause 20.4.

21 Notices

21.1 Unless otherwise provided in this Agreement, all notices and other communications between the Wheeling Parties under this Agreement shall be in writing and either sent by email (subject to clause 21.2), hand delivered or sent by internationally reputable courier to the address of the Wheeling Party concerned as set out below. No communication shall be effective until received and such shall be deemed to have been received:

(a) by email, on delivery to the recipient's server provided no error message is received by the sender;

(b) by hand when so delivered; and

(c) on the date indicated by the courier's delivery tracking system when delivered by internationally reputable courier.

21.2 The Wheeling Parties may send notices by email, provided that any notices that are served pursuant to clauses 3.1, 13.3, 14, 15, 17, 18, 19 or 20 shall be deemed received only upon receipt of the original of the notice pursuant to clauses 21.1(b) or 21.1(c).

EUCL:

Address: KN82 ST3, Nyarugenge District, Kigali City, PO Box 5634, Rwanda

Operational notices:

Attention: the Managing Director

Email: info@eucl.rw

Legal notices:

Attention: Head of Legal Services

Email: info@eucl.rw

Izuba:

Address: Nyarugenge, Nyarugenge, Umujyi wa Kigali, RWANDA

Email: raffi@izuba.energy | CBENotices@crossboundary.com | legal@crossboundary.com

Customer:

Address: BIONTECH RWANDA Ltd

c/o TMF Rwanda

Kacyiru, Gasabo,

Umujyi wa Kigali, RWANDA

Attention: General Counsel

Email: Legal@biontech.com

21.3 Any Wheeling Party may change its nominated address to another address by giving at least ten (10) Business Days' prior written notice to the other Parties.

22 Representations and warranties

22.1 EUCL represents and warrants to Izuba and the Customer that as at the Signature Date (which representations and warranties are deemed to be repeated on the Effective Date):

(a) it is duly incorporated and validly existing under the Laws of Rwanda and has the power to carry on its business and to enter into and perform its obligations under this Agreement;

(b) this Agreement has been executed by a duly authorised signatory of EUCL, and constitutes its legal, valid and binding obligation;

(c) the execution and performance of this Agreement does not, and will not, constitute a violation of any statute, judgment, order, consent, decree or regulation or rule of any court, Competent Authority or arbitrator of competent jurisdiction applicable or relating to it;

(d) there are no outstanding judgments against it and no action, claim, suit or proceeding is pending or threatened against it before any court, Competent Authority or arbitrator of competent jurisdiction that could reasonably be expected to materially and adversely affect the financial condition or operations of it or the ability of it to perform its obligations under this Agreement, or which purports to affect the legality, validity or enforceability of this Agreement;

(e) it is not in default under any agreement to which it is a party which could have a material adverse effect on its ability to perform its obligations under this Agreement;

(f) no information given by it in relation to this Agreement contains any misstatement of fact or omits to state a fact which would be materially adverse to the enforcement of the rights and remedies of Izuba under this Agreement;

(g) neither EUCL nor, to its knowledge, any person representing EUCL has solicited, received, or authorized the solicitation or receipt of, with respect to the matters which are the subject of this Agreement, any payment, gift, promise or other advantage from any person (other than Izuba or its Affiliate), whether directly or through intermediaries, to or for the use of any person working directly or indirectly on behalf of any Competent Authority, where such payment, gift, promise or advantage would violate any Anti-Bribery, Tax Evasion and Business Integrity Laws; and

(h) the statements contained in clauses 24.13(a) or 24.13(b) are true and correct.

22.2 Izuba represents and warrants to EUCL and the Customer that as at the Signature Date (which representations and warranties are deemed to be repeated by Izuba on the Effective Date):

(a) Izuba is duly incorporated and validly existing under the Laws of Rwanda, and has the power to carry on its business and to enter into and perform its obligations under this Agreement;

(b) this Agreement has been executed by a duly authorised signatory of Izuba on its behalf and constitutes its legal, valid and binding obligation;

(c) the execution, delivery, and performance of this Agreement does not, and will not, constitute a violation of any statute, judgment, order, consent, decree or regulation or rule

of any court, Competent Authority or arbitrator of competent jurisdiction applicable or relating to it;

(d) there are no outstanding judgments against Izuba, and, to the best knowledge of Izuba, no action, claim, suit or proceeding is pending or threatened against Izuba before any court, Competent Authority or arbitrator of competent jurisdiction that could reasonably be expected to materially and adversely affect the financial condition or operations of Izuba or the ability of Izuba to perform its obligations under this Agreement or which purports to affect the legality, validity or enforceability of this Agreement;

(e) Izuba is not in default under any agreement to which it is a party which could have a material adverse effect on its ability to perform its obligations under this Agreement;

(f) neither Izuba nor any of its Affiliates nor, to their knowledge, any person representing such parties has made, offered, or authorized and will not make, offer, or authorize with respect to the matters which are the subject of this Agreement, any payment, gift, promise or other advantage, whether directly or through intermediaries, to or for the use of any person working directly or indirectly on behalf of any Competent Authority, where such payment, gift, promise or advantage would violate any Anti-Bribery, Tax Evasion and Business Integrity Laws and/or International Integrity Laws;

(g) the statements contained in clauses 24.13(a) or 24.13(b) are true and correct; and

(h) no information prepared by Izuba and provided in relation to this Agreement contains any misstatement of fact or omits to state a fact which could reasonably have been expected to have a material impact on EUCL's decision to enter into this Agreement or the terms upon which EUCL was willing to enter into this Agreement, or which would be materially adverse to the enforcement of the rights and remedies of EUCL under this Agreement.

22.3 The Customer represents and warrants to EUCL and Izuba that as at the Signature Date (which representations and warranties are deemed to be repeated by the Customer on the Effective Date):

(a) it is duly incorporated and validly existing under the Laws of Rwanda and has the power to carry on its business and to enter into and perform its obligations under this Agreement;

(b) this Agreement has been executed by a duly authorised signatory of the Customer, and constitutes its legal, valid and binding obligation;

(c) the execution and performance of this Agreement does not, and will not, constitute a violation of any statute, judgment, order, decree or regulation or rule of any court, Competent Authority or arbitrator of competent jurisdiction applicable or relating to it;

(d) there are no outstanding judgments against it and no action, claim, suit or proceeding is pending or threatened against it before any court, Competent Authority or arbitrator of competent jurisdiction that could reasonably be expected to materially and adversely affect the financial condition or operations of it or the ability of it to perform its obligations under this Agreement, or which purports to affect the legality, validity or enforceability of this Agreement;

(e) it is not in default under any agreement to which it is a party which could have a material adverse effect on its ability to its perform its obligations under this Agreement;

(f) neither the Customer nor any of its Affiliates nor, to their knowledge, any person representing such parties has made, offered, or authorized and will not make, offer, or authorize with respect to the matters which are the subject of this Agreement, any payment, gift, promise or other advantage, whether directly or through intermediaries, to or for the use of any person working directly or indirectly on behalf of any Competent Authority, where such payment, gift, promise or advantage would violate any Anti-Bribery, Tax Evasion and Business Integrity Laws and/or International Integrity Laws;

(g) the statements contained in clauses 24.13(a) or 24.13(b) are true and correct; and

(h) no information given by it in relation to this Agreement contains any misstatement of fact or omits to state a fact which would be materially adverse to the enforcement of the rights and remedies of EUCL and the Customer under this Agreement.

23 Direct Rights

23.1 Cure Rights

(a) EUCL agrees that it shall not terminate this Agreement as result of an Izuba Event of Default otherwise than in accordance with the provisions of this clause 23.

(b) In the event of any breach by Izuba of any of its obligations under this Agreement (hereinafter **default**) which would (whether immediately or with passage of a given period and/or the giving of a notice) entitle EUCL to terminate this Agreement or exercise any other remedy under this Agreement or at law including suspension of the Wheeling Service or any other obligations under this Agreement (**Remedies**), EUCL shall give the Customer written notice of such default (**Default Notice**).

(c) EUCL agrees that it shall not exercise Remedies until the date falling one hundred and twenty (120) days after receipt by the Customer of the Default Notice, unless EUCL and the Customer agree to a shorter or longer period in light of the circumstances (the **Suspension Period**).

(d) Izuba and/or the Customer or any of its designees shall be entitled (but not obligated) to cure the default during the Suspension Period. If the default is not cured, then immediately at the end of the Suspension Period, EUCL may exercise any Remedy it shall have available to it. Izuba will alone remain responsible for all obligations under this Agreement during the Suspension Period, unless otherwise stipulated by the terms of this clause 23.

23.2 Step-in Rights

(a) At any time after the Customer has exercised a buy-out of the Generating Facility under the Power Purchase Agreement, such that the PPA is terminated (a **Specified Event**), the Customer may, subject to clause 23.2, of this Agreement, identify the Designated Person to assume the rights and obligations of Izuba under this Agreement.

(b) The Customer must be able to demonstrate to the reasonable satisfaction of EUCL that any Designated Person is an entity that meets the criteria to obtain a generation license and is able to comply with the Laws of Rwanda.

(c) If the Customer wishes to exercise its right under 23.2(a), it shall be entitled at any time after a Specified Event to deliver a notice to EUCL (a **Specified Event Notice**) identifying the Designated Person and stating that such Designated Person will become a party to this Agreement with effect from the date of the Specified Event Notice (the **Release Date**).

(d) On the Release Date:

(i) EUCL and Izuba shall accept the transfer (by novation) of Izuba's rights and obligations under this Agreement to the Designated Person;

(ii) Izuba shall be released from all its obligations and liabilities under this Agreement (provided that such release shall be without prejudice to any liabilities of Izuba existing as at the Release Date);

(iii) the Designated Person will assume those rights and liabilities of Izuba with effect from the Release Date; and

(iv) EUCL agrees to enter into a novation deed with the Designated Person and the Customer in order to give effect to this clause 23.2(d).

24 Miscellaneous

24.1 Variations in Writing

This Agreement may not be altered, amended, modified or otherwise changed in any respect except in writing duly executed by every Wheeling Party.

24.2 Entire Agreement

This Agreement represents the entire understanding between the Wheeling Parties in relation to the subject matter hereof and supersedes any or all previous agreements or arrangements between the Wheeling Parties in respect of the Generating Facility (whether oral or written). In regards to Izuba and the Customer, Izuba and the Customer agree that this Agreement does not supersede the Power Purchase Agreement. The Wheeling Parties confirm that they have not entered into this Agreement on the basis of any representation that is not expressly incorporated into this Agreement (or the documents referred to in it).

24.3 Exclusivity

The Wheeling Parties agree that the Wheeling Agreement and Generating Facility are intended to exclusively supply power to the Customer and neither the Generating Facility or Wheeling Agreement shall be used to supply any other customer.

24.4 Waiver

No failure or delay in exercising any right or remedy under this Agreement shall constitute a waiver of such right or remedy and no waiver of any breach of this Agreement shall be deemed to be a waiver of any other breach. No single or partial exercise of any right or remedy under this Agreement shall preclude or restrict the further exercise of any such right or remedy. No waiver by any Wheeling Party shall be effective unless such waiver is in writing signed by such Wheeling Party.

24.5 Severability

If one or more provisions contained in this Agreement is held or found to be invalid, illegal, or unenforceable in any respect, the provision(s) shall be given effect to the extent permitted by law and the invalidity, illegality, or unenforceability of any provision shall not affect the validity of the remaining provisions of this Agreement.

24.6 Counterparts

The Wheeling Parties may execute this Agreement in any number of counterparts and this shall have the same effect as if the signatures on the counterparts were on a single copy of this Agreement.

24.7 Third Parties

Save where otherwise provided in this Agreement, no person who is not a Wheeling Party has any right to enforce or enjoy the benefit of any term of this Agreement.

24.8 Confidential Information

Each Wheeling Party shall keep confidential any Confidential Information and shall not divulge the same to any third party (save insofar as may be necessary for the purpose of carrying out this Agreement) and save in respect of disclosure:

(a) to any Wheeling Party's professional advisers;

(b) to any financial institutions or potential equity investors in the Project and their professional advisers;

(c) to the extent required by the Laws of Rwanda;

(d) to any Competent Authority lawfully requesting such information;

(e) to any court of competent jurisdiction acting in pursuance of its powers; or

(f) if it was or is in the public domain other than through its fault or the fault of any person to whom such Confidential Information has been disclosed as permitted by this clause 2.

24.9 Survival

(a) The provisions of clauses 14 (*Indemnification and liability*), 17 (*Default and termination*), 19 (*Resolution of disputes*), 21 (*Notices*) and 24 (*Miscellaneous*) shall survive the expiry, cancellation or termination of this Agreement (however arising) and shall continue in full force and effect until all of the Wheeling Parties' obligations and liabilities under them have been performed and discharged in full.

(b) Without prejudice to the generality of this clause 24.9 the cancellation, expiry or termination of this Agreement or any arbitration of disputes shall not relieve the Wheeling Parties of obligations that by their nature should survive such cancellation, expiration or termination, including warranties, remedies, promises of indemnity and confidentiality.

24.10 Relationship of the Parties

This Agreement shall not be interpreted or construed to create an association, joint venture, partnership or agency between the Wheeling Parties or to impose any partnership obligation or liability upon any Wheeling Party. No Wheeling Party shall have any right, power or authority to enter into any agreement or undertaking for, or act on behalf of, or to act as or to be an agent or representative of, or to otherwise bind, the other Wheeling Party.

24.11 Successors and assigns

This Agreement shall inure to the benefit of, and be binding upon, the Parties or the Wheeling Parties in accordance with clause 1.2(a) hereto and their respective successors and permitted assigns.

24.12 No liability for review

No review or approval by EUCL of any agreement, document, instrument, drawing, specifications or design proposed by Izuba shall relieve Izuba from any liability that it would otherwise have had for its negligence in the preparation of such agreement, document, instrument, drawing, specifications or design or from failure to comply with the applicable Laws of Rwanda with respect thereto, nor shall EUCL be liable to Izuba or any other person by reason of its review or approval of an agreement, document, instrument, drawing, specification, or design. Furthermore, EUCL shall not be liable to Izuba or any other person by reason of its observation or inspection of, or any suggestions relating to, the construction, testing, operation or maintenance of the Generating Facility.

24.13 Affirmation

(a) Each Wheeling Party represents and warrants that neither it nor its Affiliates has, directly or through an agent, violated any Sanctions or engaged in any Corrupt Practices, Fraudulent Practices, Collusive Practices, Coercive Practices, or Obstructive Practices during the procurement, negotiation or execution of this Agreement, or otherwise in connection with the Project.

(b) Each Wheeling Party covenants on its own behalf that it will not nor cause any of its Affiliates or contractors to, directly or through an agent, violate any Sanctions or engage in any Corrupt Practices, Fraudulent Practices, Collusive Practices, Coercive Practices, or Obstructive Practices in the performance of this Agreement or otherwise in connection with the Project.

(c) Each Wheeling Party accepts full responsibility and strict liability for making any false declaration, not making full disclosure, misrepresenting facts, or taking any action likely to defeat the purpose of the representations and warranties contained herein and the declarations required hereby.

24.14 Governing Law

This Agreement and any dispute or claim arising out of or in connection with it or its formation (including non-contractual disputes or claims) shall be governed by, and construed in accordance with, the laws of Rwanda. For avoidance of doubt, Laws of Rwanda shall prevail over the laws of any other jurisdiction that this Agreement may be subject to in case of conflict between the two.

24.15 Language

The language of this Agreement shall be English. All documents, notices, waivers and all other communications written or otherwise between the Wheeling Parties in connection with this Agreement shall be in English.

24.16 Expenses

Except as may be otherwise agreed, all expenses incurred by or on behalf of each Wheeling Party, including all fees and expenses of agents, representatives, counsel, and accountants employed by the Wheeling Parties in connection with the negotiation, preparation and execution of this Agreement and the consummation of the transactions contemplated by this Agreement, shall be borne solely by the Wheeling Party who shall have incurred such expenses, and the other Wheeling Parties shall have no liability in respect thereof, except as provided herein or allocated hereby.

24.17 Contracting

Without prejudice to what is provided for under clause 20 of this Agreement, each Party may delegate its obligations or responsibilities under this Agreement to one or more contractors; provided, however, that no such delegation shall relieve the relevant Party of its obligations or responsibilities under this Agreement. Each Party shall contractually require its contractors to have all the required skills and capacity necessary to perform or cause to be performed any tasks that they undertake in a timely and professional manner, utilizing sound engineering principles, project management procedures, supervisory procedures, and generally acceptable industry practices.

24.18 Further assurance

Each Wheeling Party shall, and shall use reasonable endeavours to procure that any necessary third party shall, from time to time, execute such documents and do such acts and things as the requesting Wheeling Party or its Lenders may reasonably require for the purpose of giving the full benefit of this Agreement to the requesting Wheeling Party or its Lenders.

IN WITNESS whereof the authorised representatives of the Wheeling Parties have entered into this Agreement on the date first above written.

Executed by **IZUBA CROSSBOUNDARY ENERGY RWANDA LTD** acting by David Steele Katzeff, a director and Chaim Motzen, a director

Steele Katzeff (Dec 20, 2024 18:06 GMT+2)

Director

Chaim Motzen

Chaim Motzen (Dec 20, 2024 17:36 GMT+2)

Director

Executed by **ENERGY UTILITY CORPORATION LIMITED** acting by the Managing Director

Claver Gakwavu

Claver Gakwavu (Dec 30, 2024 11:40 GMT+2)

Name: Claver Gakwavu

Managing Director

Executed by **BIONTECH RWANDA LIMITED** acting by Sierk Poetting, a director and Aneto Okeke, a director

Sierk Poetting (Dec 20, 2024 18:16 GMT+1)

Director

Aneto Okeke (Dec 21, 2024 12:26 GMT+2)

Director

Schedule 1

Wheeling Charge

USD two (2) Cents (tax exclusive) wheeling charges will be charged on a per kWh basis and calculated on the basis of the kWh of Wheeled Energy transmitted from the Point of Delivery to the Point of Withdrawal (as determined by the PoW meter reading on a monthly basis unless higher than the PoD meter reading in which case the PoD meter reading will apply), including the Wheeling Energy Loss Factor.

Schedule 2
Conditions Precedent

Part 1
Izuba Conditions Precedent

1 Izuba shall be responsible for satisfying the following Conditions Precedent, each of which shall be Conditions Precedent in favour of EUCL:

(a) the provision by Izuba of a certified true copy of the board resolution or other corporate approval authorising its entry into this Agreement;

(b) the provision by Izuba of a copy of its generation licence;

(c) Izuba company registration certificates;

(d) Tax clearance;

(e) written confirmation that Izuba has signed the Power Purchase Agreement with the Customer;

(f) Provision by Izuba of Environmental Certificate; and

(g) Provision of Lease secured by Izuba.

Part 2
EUCL Conditions Precedent

1 EUCL shall be responsible for satisfying the following Conditions Precedent, each of which shall be Conditions Precedent in favour of Izuba:

(a) the provision by EUCL of a certified true copy of the board resolution or other corporate approval authorising its entry into this Agreement; and

(b) the provision by EUCL of a 'no objection letter' from the Rwanda Utilities Regulatory Authority.

Part 3
Customer Conditions Precedent

1 The Customer shall be responsible for satisfying the following Conditions Precedent, which shall be a Conditions Precedent in favour of EUCL and Izuba:

(a) the provision by the Customer of a certified true copy of the board resolution or other corporate approval authorising its entry into this Agreement, and

(b) the provision of a company registration certificate.

Schedule 3

Interconnection Facilities

The Interconnection Facilities shall comprise of:

1 15kV AC Cable between the main solar plant RMU and the Rwinkwavu substation switchboard

2 15kV Incomer Panel at the Rwinkwavu substation switchboard

Single Line Diagram showing the Interconnection Facilities:

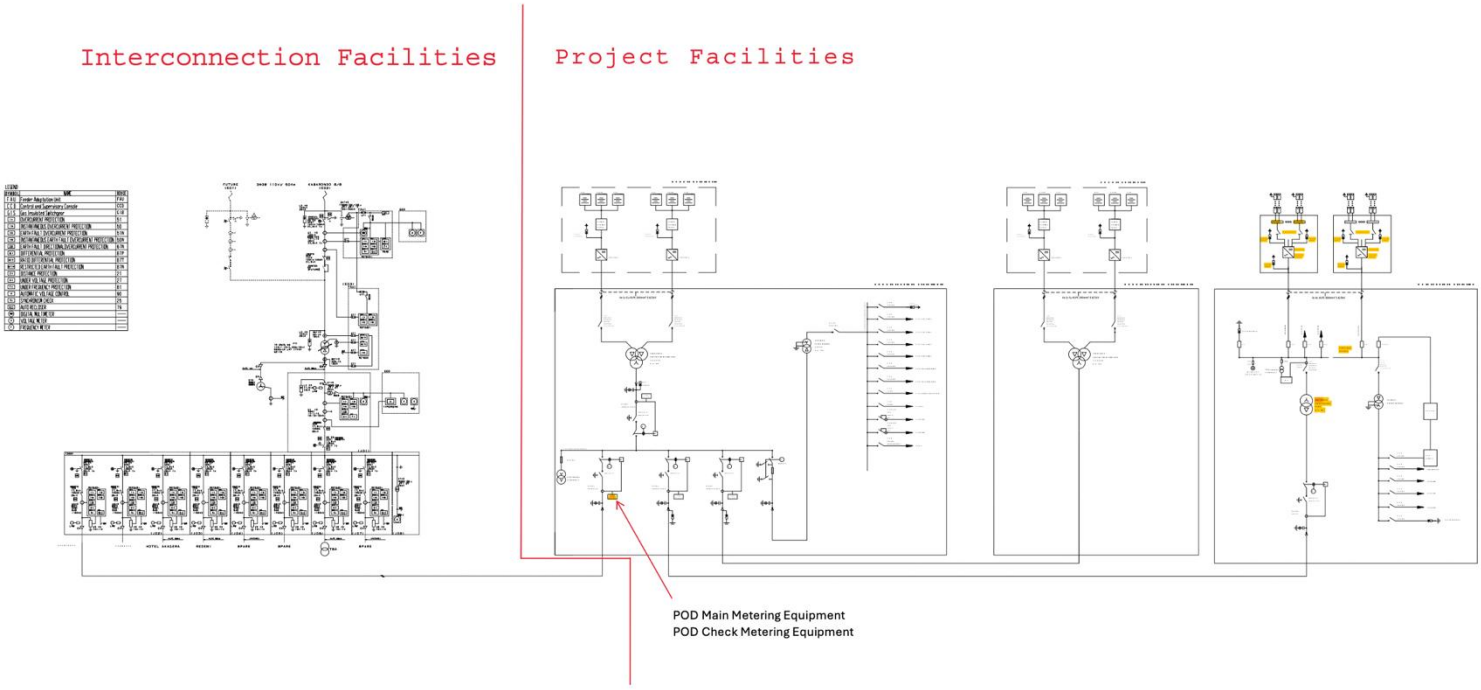

Concept diagram showing the Metering Equipment at the Point of Withdrawal:

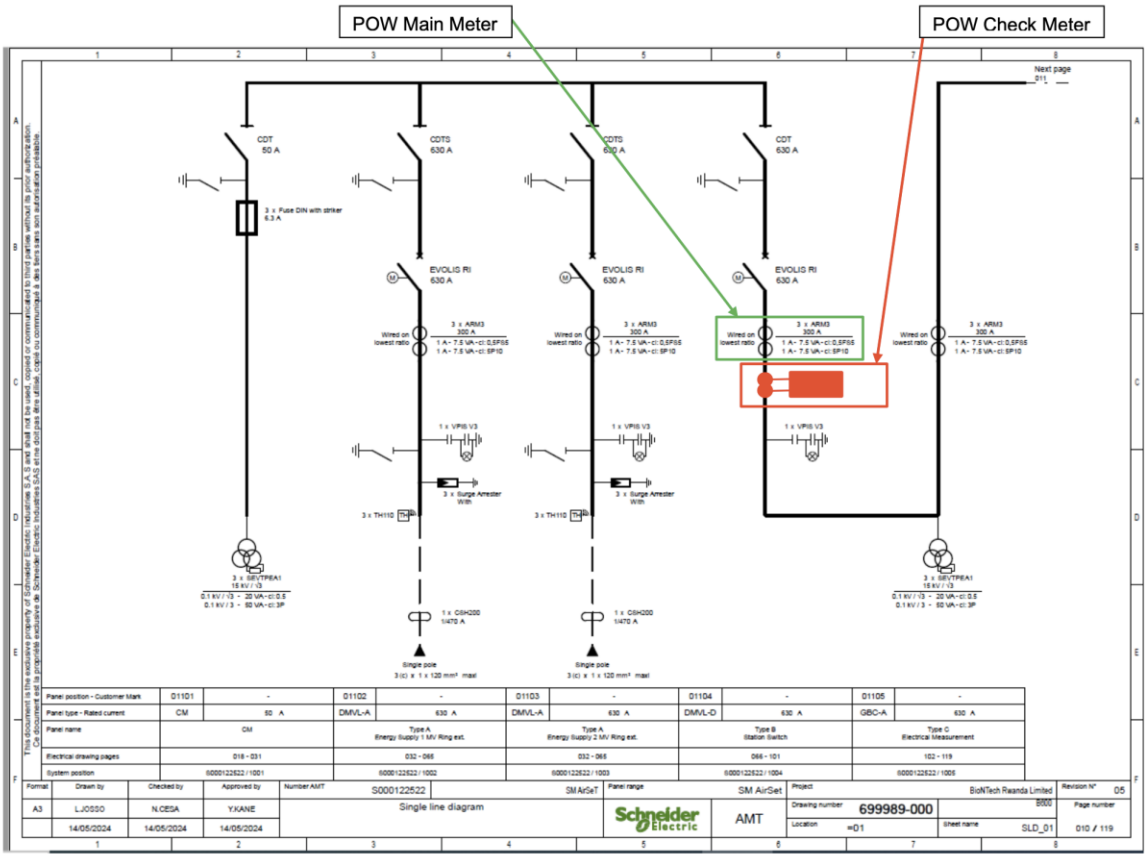

Part 1

List of minimum specifications

Component	Sizing	Manufacturer Pool	Manufacturer Warranty
AC Cable	15kV rated	**Selected:** TBC **Alternatives:** TBC	TBC
Incomer Panel	15kV rated	**Selected:** ABB ZX2 **Alternatives:** TBC	TBC

Part 2

Testing and commissioning requirements

ID	DESCRIPTION
1.1	**15kV Incomer Panel -** Perform all testing and commissioning of the equipment, including: **- Visual Inspections** ● Installation Checklist ● Visual Inspection Checklist **- Functional Checks** ● Closing & tripping operation of switching devices ● Point-to-point checks ● Interlocks ● UPS tests ● MCB checks **- Protection Relay Tests:** ● Relay settings and configuration ● Secondary injections of protection elements **- Energization tests** ● Operational checks ● Voltage level verification
1.2	**AC Cable Tests** ● Insulation resistance tests ● Continuity tests

Schedule 4

Responsibility Assignment Matrix for the Interconnection Facility

Responsibility Assignment Matrix for the Interconnection Facility

	Responsibilities	IZUBA	EUCL	Reference
1	Design of Interconnection Facility	Responsible	Consulted & Approval	clause 5.1
2	Provision of access to Point of Connection (at Rwinkwavu substation)	Notified	Responsible	clause 6.1
3	Supply and installation of equipment and material for the Interconnection Facility	Responsible	Consulted, Approval & Support	clause 5.1
4	Develop an Outage Plan for connecting the plant evacuation line to the Point of Connection	Responsible	Consulted & Approval	Grid Code
5	Provision and coordination of outages (power shutdowns/switching operations) at Point of Connection	Notified	Responsible	Grid Code
6	Develop protection schemes for the Interconnection Facility	Responsible	Consulted & Approval	Grid code
7	Supply and installation of the required protection relays at the Point of Connection	Responsible	Consulted & Approval	Grid Code
8	Provision of upstream protection settings	Notified	Responsible	Grid Code
9	Main Meter installation at Point of Delivery	Responsible	Notified & Consulted	clause 11.1
10	Main Meter installation at Point of Withdrawal	Notified	Responsible	clause 12.1
11	Testing and commissioning of the Interconnection Facility	Responsible	Notified, Witness & Support	clause 5.1

Schedule 5
Metering and Reconciliation Protocol

1 Monthly Invoices

(a) Within 5 (five) working days of the last day of each month, Izuba will submit a Dashboard summary to the Wheeling Parties stating the following numbers during the respective month:

(i) Delivered Energy (POD Metering Installation reading at the end of the month minus the POD Metering Installation reading at the start of the month);

(ii) Withdrawn Energy (POW Metering Installation reading at the end of the month minus the POW Metering Installation reading at the start of the month);

(iii) Monthly Peak Delivered Energy; and

(iv) Monthly Peak Withdrawn Energy.

(b) EUCL will prepare and issue an Invoice to the Customer in accordance with the following:

(i) The invoice will be in the form of the first tab of the invoice template Excel file ***(20241119 Invoice template and Bi-annual Recon – Example)***, as per the image below:

INVOICE STATEMENT

Invoice Date: **Page No: 1 of 1**
Statement Number:
PO No.:
Sent to: invoices@BioNtech

cc: BNT_PPA_IZUBA_EUCL@biontech.com

To:	BioNTech Rwanda Ltd	From:	Energy Utility Corporation Ltd
Address		Physical address:	
Customer ID:		TIN No:	
Meter No.:		VAT No:	
TIN No.:		Phone:	
VAT No.:			

Item	Energy (MWh)	Tariff (RWF/MWh)	Charge	VAT (18%)	RURA (0.3%)	Total
Wheeling Fee for the period	***	***	***	***	***	***
Low Power Factor (LPF) Surcharge						***
Peak Period Excess Energy Payment	***	***	***	***	***	***
Total (RWF)						***

WIRING INSTRUCTIONS FOR TRANSFER IN ****

Account Holder:	
Bank Name:	
Account #:	
Address:	
Bank Code:	
Branch Code:	
SWIFT Code:	

Invoice Due Date:

Cover Invoice | JAN | FEB | MAR | APR | MAY | JUN | Excess Energy Payment

(ii) The Wheeling Charge will be calculated in accordance with Schedule 1 and invoiced to the Customer monthly in accordance with Clause 13.3.

(iii) Peak Period Excess Energy Payments will be calculated in accordance with Clause 9.1 and invoiced to the Customer monthly in accordance with Clause 13.3.

(iv) For the invoicing of amounts described in 1(b)(ii) and 1(b)(iii) above, EUCL will populate the form of invoice template (***Excel workbook file 20241119 Invoice template and Bi-annual Recon - Example***) using the meter data provided under 1(a), unless the Agreement states otherwise, as set out in the example below.

Period:	Jan-25	Due Date:	Feb-25	
Invoice Reference:				
		To:	BioNTech Rwanda ltd	
From: Energy Utility Corporation Ltd		Customer ID		
TIN/VAT Number:		Meter Number		
Address:		TIN number		
		Phone		

Item	Energy (MWh)	Tariff (RWF/MWh)	Charge	Tax (18%)	RURA (0.3%)	Total
Wheeling Fee for the period	500	26 000	12 988 300	2 337 894	38 965	**15 365 159**
Low Power Factor (LPF) Surcharge			572 631	103 074	1 718	677 423
Cosphi	0.89					
Peak Period Excess Energy Payment	16					**2 006 368.00**
Production under the floor	0	106 000	-	-	-	-
Consumption over the threshold	16	106 000	1 696 000	305 280	5 088	2 006 368
		TOTAL (RWF):				**18 048 949.65**

Invoice calculations and data recording		**Unit**	Index	Current Index	Previous Index
Energy consumption at Point of Withdrawal	485	*MWh*	ACTIVE	600	0
Reactive Power	250	*kvarh*	REACTIVE	400	0
Metered Output at Point of Delivery	550	*MWh*		650	0
Monthly Peak Delivered Energy	120	*MWh*	Peak Floor	96 MWh	
Monthly Peak Withdrawn Energy	160	*MWh*	Peak Threshold	144 MWh	
			Peak Hour Peri	18:00-23:00	
Deemed Delivered Energy (during GASE)	0	*MWh*			
Grid Availability Shortfall Events (GASE)		*hrs*			
Wheeling loss factor	3%	*%*			
Wheeling Charge	20	*USD/MWh*			
EUCL Customer tariff	106 000	*RWF/MWh*			
RWF/USD	1300	*RWF*			

Cover Invoice | JAN | FEB | MAR | APR | MAY | JUN | Excess Energy Payment

	A	B	C	D	E	F	G	H
1								
2								
3		Period:	45658	Due Date:	45689			
4		Invoice Reference:						
5				To:	BioNTech Rwanda ltd			
6		From: Energy Utility Corporation Ltd		Customer ID				
7		TIN/VAT Number:		Meter Number				
8		Address:		TIN number				
9				Phone				
10								
11								
12		**Item**	**Energy (MWh)**	**Tariff (RWF/MWh)**	**Charge**	**Tax (18%)**	**RURA (0.3%)**	**Total**
13		Wheeling Fee for the period	=MIN(C23*(1+$C$33),C25*(1+$C$33))	=C34*C36	=D13*C13	=E13*18%	=E13*0.3%	**=SUM(E13:G13)**
14		Low Power Factor (LPF) Surcharge			=IF(C15<0.9,0.9-C15,0)*$C$23*$C$35	=E14*18%	=E14*0.3%	=SUM(E14:G14)
15		Cosphi	=COS(ATAN(C24/C23))					
16								
17		Peak Period Excess Energy Payment	=SUM(C18:C19)					**=SUM(H18:H19)**
18		Production under the floor	=MAX(F27-C27,0)	=$C$35	=C18*D18	=E18*18%	=E18*0.3%	=SUM(E18:G18)
19		Consumption over the threshold	=MAX(C28-F28,0)	=$C$35	=C19*D19	=E19*18%	=E19*0.3%	=SUM(E19:G19)
20				**TOTAL (RWF):**				**=SUM(H13,H14,H17)**
21								
22		**Invoice calculations and data recording**		**Unit**	Index	Current Index		Previous Index
23		Energy consumption at Point of Withdrawal	485	*MWh*	ACTIVE	600		0
24		Reactive Power	250	*kvarh*	REACTIVE	400		0
25		Metered Output at Point of Delivery	550	*MWh*		650		0
26								
27		Monthly Peak Delivered Energy	120	*MWh*	Peak Floor	96	MWh	
28		Monthly Peak Withdrawn Energy	160	*MWh*	Peak Threshold	144	MWh	
29					Peak Hour Period	18:00-23:00		
30		Deemed Delivered Energy (during GASE)	0	*MWh*				
31		Grid Availability Shortfall Events (GASE)		*hrs*				
32								
33		Wheeling loss factor	0.03	*%*				
34		Wheeling Charge	20	*USD/MWh*				
35		EUCL Customer tariff	106000	*RWF/MWh*				
36		RWF/USD	1300	*RWF*				
37								
38								
39								
40								
41								
42								
43								

Cover Invoice | JAN | FEB | MAR | APR | MAY | JUN | Excess Energy Payment | JULY | AUG | SEPT | OCT

Main equations of the calculation above in plain text (cells B13 to B19)

B13: Wheeling Fee for the period:

C13: Energy (MWh) = MIN(Energy consumption at Point of Withdrawal*(1+Wheeling loss factor);Metered Output at Point of Delivery *(1+Wheeling loss factor))

B14: Low Power Factor (LPF) Surcharge:

E14: Charge = IF(Cosphi<0,9;0,9-Cosphi;0)*$C$23*$C$35

B15: Cosphi:

C15: Energy (MWh) = COS(ARCTAN(Reactive Power/Energy consumption at Point of Withdrawal))

B17: Peak Period Excess Energy Payment:

C17: Energy (MWh) = Production under the floor + Consumption over the threshold

B18: Production under the floor:

C18: Energy (MWh) =MAX(Peak Floor MWh - Monthly Peak Delivered Energy MWh;0)

B19: Consumption over the threshold:

C19: Energy MWh =MAX(Monthly Peak Withdrawn Energy MWh - Peak Threshold MWh;0)

(v) If EUCL determines that the amounts submitted by Izuba under 1(a) are incorrect, EUCL shall explain the difference in the (Excel workbook file 20241119 Invoice template and Bi-annual Recon - Example) calculation.

2 Bi-annual Reconciliation and Invoices

(a) Within 5 (five) working days of the last day of each Electricity Period, Izuba will submit a Dashboard summary to the Wheeling Parties stating the following numbers during the respective Electricity Period:

(i) Delivered Energy (POD Metering Installation reading at the end of the Electricity Period minus the POD Metering Installation reading at the start of the Electricity Period);

(ii) Withdrawn Energy (POW Metering Installation reading at the end of the Electricity Period minus the POW Metering Installation reading at the start of the Electricity Period); and

(iii) Sum of the Peak Period Excess Energy Payments during such Electricity Period.

(b) EUCL will prepare and issue a Bi-Annual Reconciliation in accordance with Clause 9.2 and share such Bi-Annual Reconciliation with the Customer following the last day of each Electricity Period. EUCL shall utilize the Excel workbook template ***20241119 Invoice template and Bi-annual Recon - Example*** to calculate the Bi-Annual Reconciliation by populating the meter data provided under 2(a) unless the Agreement states otherwise.

(c) If EUCL determines that the amounts submitted by Izuba under 2(a) are incorrect, EUCL should explain the difference in the (Excel workbook file ***20241119 Invoice template and Bi-annual Recon - Example***) calculation.

(d) In the event the Bi-Annual Reconciliation determines that there is an Excess Energy Payment,

(i) EUCL shall invoice the Customer and the Customer shall pay the Invoice pursuant to Clause 13.3.

(ii) EUCL shall use the invoice template (Excel workbook file 20241119 Invoice template and Bi-annual Recon – Example) using the meter data provided under 2(a) unless the Agreement states otherwise as set out in the example below:

Period:	Jun-25		Due Date:		
Invoice Reference:					
			To:	BioNTech Rwanda Ltd	
From: Energy Utility Corporation Ltd			Customer ID		
TIN/VAT Number:			Meter Number		
Address:			TIN number		
			Phone		

Item	Energy (MWh)	Tariff (RWF/MWh)	Charge	Tax (18%)	RURA Fee (0.3%)		Total
Total Excess Energy for the Electricity Period	0	94 000	-	-	-	RWF	-
less Peak Period Excess Energy	0	94 000	-	-	-	RWF	-
						RWF	**-**

Invoice calculations and data recording	Consumption (MWh)	Production (MWh)	Net WLF (MWh)	DDE (MWh)	Production net WLF + DDE (MWh)	Net consumption (MWh)
JAN	485	550	533.50	-	533.50	(48.50)
FEB	510	600	582.00	-	582.00	(72.00)
MAR	500	580	562.60	-	562.60	(62.60)
APR	510	500	485.00	3.00	488.00	22.00
MAY	600	585	567.45	-	567.45	32.55
JUN	590	500	485.00	6.20	491.20	98.80
Total	3 195	3 315	3 216	9	3 225	(30)

**WLF = Wheeling Loss factor*

Peak Period Excess Energy paid during the period	MWh
JAN	16
FEB	0
MAR	6
APR	0
MAY	14
JUN	0
	36

Wheeling loss factor (WLF)	3%	*%*
Wheeling Charge	20	*USD/MWh*
EUCL Customer tariff	94 000	*RWF/MWh*
RWF/USD	1300	*RWF*

Cover Invoice | JAN | FEB | MAR | APR | MAY | JUN | **Excess Energy Payment** | JULY | AUG

Period:	45809			Due Date:		
Invoice Reference:						
				To:	BioNTech Rwanda Ltd	
From: Energy Utility Corporation Ltd				Customer ID		
TIN/VAT Number:				Meter Number		
Address:				TIN number		
				Phone		

Item	Energy (MWh)	Tariff (RWF/MWh)	Charge	Tax (18%)	RURA Fee (0.3%)	Total
Total Excess Energy for the Electricity Period	=MAX(H24,0)	=C37	=D13*C13	=E13*18%	=E13*0.3%	=SUM(E13:G13)
less Peak Period Excess Energy	=IF(C13=0,0,$C$33)	=C37	=D14*C14	=E14*18%	=E14*0.3%	=-SUM(E14:G14)
						=MAX(0,SUM(H13:H14))

Invoice calculations and data recording	Consumption (MWh)	Production (MWh)	Net WLF (MWh)	DDE (MWh)	Production net WLF + DDE (MWh)	Net consumption (MWh)
JAN	=JAN!C23	=JAN!C25	=D18-(D18*$C$35)	=JAN!C30	=SUM(E18:F18)	=C18-G18
FEB	=FEB!C23	=FEB!C25	=D19-(D19*$C$35)	=FEB!C30	=SUM(E19:F19)	=C19-G19
MAR	=MAR!C23	=MAR!C25	=D20-(D20*$C$35)	=MAR!C30	=SUM(E20:F20)	=C20-G20
APR	=APR!C23	=APR!C25	=D21-(D21*$C$35)	=APR!C30	=SUM(E21:F21)	=C21-G21
MAY	=MAY!C23	=MAY!C25	=D22-(D22*$C$35)	=MAY!C30	=SUM(E22:F22)	=C22-G22
JUN	=JUN!C23	=JUN!C25	=D23-(D23*$C$35)	=JUN!C30	=SUM(E23:F23)	=C23-G23
Total	=SUM(C18:C23)	=SUM(D18:D23)	=SUM(E18:E23)	=SUM(F18:F23)	=SUM(G18:G23)	=SUM(H18:H23)

**WLF = Wheeling Loss factor*

Peak Period Excess Energy paid during the period		MWh
JAN	=JAN!C17	
FEB	=FEB!C17	
MAR	=MAR!C17	
APR	=APR!C17	
MAY	=MAY!C17	
JUN	=JUN!C17	
	=SUM(C27:C32)	

Wheeling loss factor (WLF)	0.03	*%*
Wheeling Charge	20	*USD/MWh*
EUCL Customer tariff	94000	*RWF/MWh*
RWF/USD	1300	*RWF*

Cover Invoice | JAN | FEB | MAR | APR | MAY | JUN | **Excess Energy Payment** | JULY | AUG | SEPT | OCT | NOV

INVOICE STATEMENT

Invoice Date:
Statement Number:
PO No.:
Sent to: invoices@BioNtech
cc:
BNT_PPA_IZUBA_EUCL@biontech.com

Page No: 1 of 1

To:	BioNTech Rwanda Ltd	From:	Energy Utility Corporation Ltd
Address		Physical address:	
Customer ID:		TIN No:	
Meter No.:		VAT No:	
TIN No.:		Phone:	
VAT No.:			

Item	Energy (MWh)	Tariff (RWF/MWh)	Charge	VAT (18%)	RURA (0.3%)	Total
Wheeling Fee for the period	***	***	***	***	***	***
Low Power Factor (LPF) Surcharge						***
Peak Period Excess Energy Payment	***	***	***	***	***	***
Total (RWF)						***

WIRING INSTRUCTIONS FOR TRANSFER IN ****

Account Holder:	
Bank Name:	
Account #:	
Address:	
Bank Code:	
Branch Code:	
SWIFT Code:	

Invoice Due Date:

Cover Invoice | JAN | FEB | MAR | APR | MAY | JUN | Excess Energ

Period:	45658	Due Date:	45689				
Invoice Reference:							
		To:	BioNTech Rwanda ltd				
From: Energy Utility Corporation Ltd		Customer ID					
TIN/VAT Number:		Meter Number					
Address:		TIN number					
		Phone					

Item	Energy (MWh)	Tariff (RWF/MWh)	Charge	Tax (18%)	RURA (0.3%)	Total
Wheeling Fee for the period	=MIN(C23*(1+$C$33),C25*(1+$C$33))	=C34*C36	=D13*C13	=E13*18%	=E13*0.3%	=SUM(E13:G13)
Low Power Factor (LPF) Surcharge			=IF(C15<0.9,0.9-C15,0)*$C$23*$C$35	=E14*18%	=E14*0.3%	=SUM(E14:G14)
Cosphi	=COS(ATAN(C24/C23))					
Peak Period Excess Energy Payment	=SUM(C18:C19)					=SUM(H18:H19)
Production under the floor	=MAX(F27-C27,0)	=$C$35	=C18*D18	=E18*18%	=E18*0.3%	=SUM(E18:G18)
Consumption over the threshold	=MAX(C28-F28,0)	=$C$35	=C19*D19	=E19*18%	=E19*0.3%	=SUM(E19:G19)
		TOTAL (RWF):				=SUM(H13,H14,H17)

Invoice calculations and data recording		Unit	Index	Current Index		Previous Index
Energy consumption at Point of Withdrawal	485	MWh	ACTIVE	600		0
Reactive Power	250	kvarh	REACTIVE	400		0
Metered Output at Point of Delivery	550	MWh		650		0
Monthly Peak Delivered Energy	120	MWh	Peak Floor	96	MWh	
Monthly Peak Withdrawn Energy	160	MWh	Peak Threshold	144	MWh	
			Peak Hour Period	18:00-23:00		
Deemed Delivered Energy (during GASE)	0	MWh				
Grid Availability Shortfall Events (GASE)		hrs				
Wheeling loss factor	0.03	%				
Wheeling Charge	20	USD/MWh				
EUCL Customer tariff	106000	RWF/MWh				
RWF/USD	1300	RWF				

Cover Invoice | JAN | FEB | MAR | APR | MAY | JUN | Excess Energy Payment | JULY | AUG | SEPT | OCT

Period:	45689	Due Date:	
Invoice Reference:			
		To:	
From: Energy Utility Corporation Ltd		Customer ID	
TIN/VAT Number:		Meter Number	
Address:		TIN number	
		Phone	

Item	Energy (MWh)	Tariff (RWF/MWh)	Charge	Tax (18%)	RURA Fee (0.3%)	Total
Wheeling Fee for the period	=MIN(C23*(1+$C$33),C25*(1+$C$33))	=C34*C36	=D13*C13	=E13*18%	=E13*0.3%	=SUM(E13:G13)
Low Power Factor(LPF) Surcharge			=IF(C15<0.9,0.9-C15,0)*$C$23*$C$35	=E14*18%	=E14*0.3%	=SUM(E14:G14)
Cosphi	=COS(ATAN(C24/C23))					
Peak Period Excess Energy Payment	=SUM(C18:C19)					=SUM(H18:H19)
Production under the floor	=MAX(F27-C27,0)	=$C$35	=C18*D18	=E18*18%	=E18*0.3%	=SUM(E18:G18)
Consumption over the threshold	=MAX(C28-F28,0)	=$C$35	=C19*D19	=E19*18%	=E19*0.3%	=SUM(E19:G19)
		TOTAL (RWF):				=SUM(H13,H14,H17)

Invoice calculations and data recording		Unit	Index	Current Index		Previous Index
Energy consumption at Point of Withdrawal	510	MWh	ACTIVE	600		0
Reactive Power	250	kvarh	REACTIVE	400		0
Metered Output at Point of Delivery	600	MWh		650		0
Monthly Peak Delivered Energy	110	MWh	Peak Floor	96	MWh	
Monthly Peak Withdrawn Energy	130	MWh	Peak Threshold	144	MWh	
			Peak Hour Period	18:00-23:00		
Deemed Delivered Energy (during GASE)	0	MWh				
Grid Availability Shortfall Events (GASE)		hrs				
Wheeling loss factor	0.03	%				
Wheeling Charge	20	USD/MWh				
EUCL Customer tariff	106000	RWF/MWh				
RWF/USD	1300	RWF				

Cover Invoice | JAN | FEB | MAR | APR | MAY | JUN | Excess Energy Payment | JULY | AUG | SEPT | OCT

Period:	45717	Due Date:				
Invoice Reference:						
		To:				
From: Energy Utility Corporation Ltd		Customer ID				
TIN/VAT Number:		Meter Number				
Address:		TIN number				
		Phone				

Item	Energy (MWh)	Tariff (RWF/MWh)	Charge	Tax (18%)	RURA Fee (0.3%)	Total
Wheeling Fee for the period	=MIN(C23*(1+$C$33),C25*(1+$C$33))	=C34*C36	=D13*C13	=E13*18%	=E13*0.3%	=SUM(E13:G13)
Low Power Factor(LPF) Surcharge			=IF(C15<0.9,0.9-C15,0)*$C$23*$C$35	=E14*18%	=E14*0.3%	=SUM(E14:G14)
Cosphi	=COS(ATAN(C24/C23))					
Peak Period Excess Energy Payment	=SUM(C18:C19)					=SUM(H18:H19)
Production under the floor	=MAX(F27-C27,0)	=$C$35	=C18*D18	=E18*18%	=E18*0.3%	=SUM(E18:G18)
Consumption over the threshold	=MAX(C28-F28,0)	=$C$35	=C19*D19	=E19*18%	=E19*0.3%	=SUM(E19:G19)
		TOTAL (RWF):				=SUM(H13,H14,H17)

Invoice calculations and data recording		Unit	Index	Current Index		Previous Index
Energy consumption at Point of Withdrawal	500	MWh	ACTIVE	600		0
Reactive Power	250	kvarh	REACTIVE	400		0
Metered Output at Point of Delivery	580	MWh		650		0
Monthly Peak Delivered Energy	90	MWh	Peak Floor	96	MWh	
Monthly Peak Withdrawn Energy	130	MWh	Peak Threshold	144	MWh	
			Peak Hour Period	18:00-23:00		
Deemed Delivered Energy (during GASE)	0	MWh				
Grid Availability Shortfall Events (GASE)		hrs				
Wheeling loss factor	0.03	%				
Wheeling Charge	20	USD/MWh				
EUCL Customer tariff	106000	RWF/MWh				
RWF/USD	1300	RWF				

Cover Invoice | JAN | FEB | MAR | APR | MAY | JUN | Excess Energy Payment | JULY | AUG | SEPT | OCT

Period:	45748	Due Date:					
Invoice Reference:							
		To:					
From: Energy Utility Corporation Ltd		Customer ID					
TIN/VAT Number:		Meter Number					
Address:		TIN number					
		Phone					

Item	Energy (MWh)	Tariff (RWF/MWh)	Charge	Tax (18%)	RURA Fee (0.3%)	Total
Wheeling Fee for the period	=MIN(C23*(1+$C$33),C25*(1+$C$33))	=C34*C36	=D13*C13	=E13*18%	=E13*0.3%	=SUM(E13:G13)
Low Power Factor(LPF) Surcharge			=IF(C15<0.9,0.9-C15,0)*$C$23*$C$35	=E14*18%	=E14*0.3%	=SUM(E14:G14)
Cosphi	=COS(ATAN(C24/C23))					
Peak Period Excess Energy Payment	=SUM(C18:C19)					=SUM(H18:H19)
Production under the floor	=MAX(F27-C27,0)	=$C$35	=C18*D18	=E18*18%	=E18*0.3%	=SUM(E18:G18)
Consumption over the threshold	=MAX(C28-F28,0)	=$C$35	=C19*D19	=E19*18%	=E19*0.3%	=SUM(E19:G19)
		TOTAL (RWF):				=SUM(H13,H14,H17)

Invoice calculations and data recording		Unit	Index	Current Index		Previous Index
Energy consumption at Point of Withdrawal	510	MWh	ACTIVE	600		0
Reactive Power	250	kwrh	REACTIVE	400		0
Metered Output at Point of Delivery	500	MWh		650		0
Monthly Peak Delivered Energy	110	MWh	Peak Floor	96	MWh	
Monthly Peak Withdrawn Energy	140	MWh	Peak Threshold	144	MWh	
			Peak Hour Period	18:00-23:00		
Deemed Delivered Energy (during GASE)	3	MWh				
Grid Availability Shortfall Events (GASE)	1	hrs				
Wheeling loss factor	0.03	%				
Wheeling Charge	20	USD/MWh				
EUCL Customer tariff	106000	RWF/MWh				
RWF/USD	1300	RWF				

Cover Invoice | JAN | FEB | MAR | APR | MAY | JUN | Excess Energy Payment | JULY | AUG | SEPT | OCT

Period:	45778	Due Date:				
Invoice Reference:						
		To:				
From: Energy Utility Corporation Ltd		Customer ID				
TIN/VAT Number:		Meter Number				
Address:		TIN number				
		Phone				

Item	Energy (MWh)	Tariff (RWF/MWh)	Charge	Tax (18%)	RURA Fee (0.3%)	Total
Wheeling Fee for the period	=MIN(C23*(1+$C$33),C25*(1+$C$33))	=C34*C36	=D13*C13	=E13*18%	=E13*0.3%	**=SUM(E13:G13)**
Low Power Factor(LPF) Surcharge			=(F(C15<0.9,0.9-C15,0)*$C$23*$C$35	=E14*18%	=E14*0.3%	=SUM(E14:G14)
Cosphi	=COS(ATAN(C24/C23))					
Peak Period Excess Energy Payment	=SUM(C18:C19)					**=SUM(H18:H19)**
Production under the floor	=MAX(F27-C27,0)	=$C$35	=C18*D18	=E18*18%	=E18*0.3%	=SUM(E18:G18)
Consumption over the threshold	=MAX(C28-F28,0)	=$C$35	=C19*D19	=E19*18%	=E19*0.3%	=SUM(E18:G19)
		TOTAL (RWF):				**=SUM(H13,H14,H17)**

Invoice calculations and data recording		**Unit**	Index	Current Index		Previous Index
Energy consumption at Point of Withdrawal	600	*MWh*	ACTIVE	600		0
Reactive Power	250	*kvarh*	REACTIVE	400		0
Metered Output at Point of Delivery	585	*MWh*		650		0
Monthly Peak Delivered Energy	120	*MWh*	Peak Floor	96	MWh	
Monthly Peak Withdrawn Energy	158	*MWh*	Peak Threshold	144	MWh	
			Peak Hour Period	18:00-23:00		
Deemed Delivered Energy (during GASE)	0	*MWh*				
Grid Availability Shortfall Events (GASE)		*hrs*				
Wheeling loss factor	0.03	*%*				
Wheeling Charge	20	*USD/MWh*				
EUCL Customer tariff	106000	*RWF/MWh*				
RWF/USD	1300	*RWF*				

Cover Invoice | JAN | FEB | MAR | APR | MAY | JUN | Excess Energy Payment | JULY | AUG | SEPT | OCT

	A	B	C	D	E	F	G	H
1								
2								
3		Period:	45809	Due Date:				
4		Invoice Reference:						
5				To:				
6		From: Energy Utility Corporation Ltd		Customer ID				
7		TIN/VAT Number:		Meter Number				
8		Address:		TIN number				
9				Phone				
10								
11								
12		**Item**	**Energy (MWh)**	**Tariff (RWF/MWh)**	**Charge**	**Tax (18%)**	**RURA Fee (0.3%)**	**Total**
13		Wheeling Fee for the period	=MIN(C23*(1+$C$33),C25*(1+$C$33))	=C34*C36	=D13*C13	=E13*18%	=E13*0.3%	**=SUM(E13:G13)**
14		Low Power Factor(LPF) Surcharge			=(IF(C15<0.9,0.9-C15,0)*$C$23*$C$35	=E14*18%	=E14*0.3%	=SUM(E14:G14)
15		Cosphi	=COS(ATAN(C24/C23))					
16								
17		Peak Period Excess Energy Payment	=SUM(C18:C19)					**=SUM(H18:H19)**
18		Production under the floor	=MAX(F27-C27,0)	=$C$35	=C18*D18	=E18*18%	=E18*0.3%	=SUM(E18:G18)
19		Consumption over the threshold	=MAX(C28-F28,0)	=$C$35	=C19*D19	=E19*18%	=E19*0.3%	=SUM(E19:G19)
20				**TOTAL (RWF):**				**=SUM(H13,H14,H17)**
21								
22		**Invoice calculations and data recording**		**Unit**	Index	Current Index		Previous Index
23		Energy consumption at Point of Withdrawal	590	*MWh*	ACTIVE	600		0
24		Reactive Power	250	*kvarh*	REACTIVE	400		0
25		Metered Output at Point of Delivery	500	*MWh*		650		0
26								
27		Monthly Peak Delivered Energy	120	*MWh*	Peak Floor	96	MWh	
28		Monthly Peak Withdrawn Energy	140	*MWh*	Peak Threshold	144	MWh	
29					Peak Hour Period	18:00-23:00		
30		Deemed Delivered Energy (during GASE)	6.2	*MWh*				
31		Grid Availability Shortfall Events (GASE)	2.2	*hrs*				
32								
33		Wheeling loss factor	0.03	%				
34		Wheeling Charge	20	*USD/MWh*				
35		EUCL Customer tariff	106000	*RWF/MWh*				
36		RWF/USD	1300	*RWF*				
37								
38								
39								
40								
41								
42								
43								
44								
45								
46								
47								

Cover Invoice | JAN | FEB | MAR | APR | MAY | JUN | Excess Energy Payment | JULY | AUG | SEPT | OCT

Period:	45809			Due Date:		
Invoice Reference:						
				To:	BioNTech Rwanda Lt	
From: Energy Utility Corporation Ltd				Customer ID		
TIN/VAT Number:				Meter Number		
Address:				TIN number		
				Phone		

Item	Energy (MWh)	Tariff (RWF/MWh)	Charge	Tax (18%)	RURA Fee (0.3%)	Total
Total Excess Energy for the Electricity Period	=MAX(H24,0)	=C37	=D13*C13	=E13*18%	=E13*0.3%	=SUM(E13:G13)
less Peak Period Excess Energy	=IF(C13=0,0,$C$33)	=C37	=D14*C14	=E14*18%	=E14*0.3%	=-SUM(E14:G14)
						=MAX(0,SUM(H13:H14))

Invoice calculations and data recording	Consumption (MWh)	Production (MWh)	Net WLF (MWh)	DDE (MWh)	Production net WLF +	Net consumption (MWh)
JAN	=JAN!C23	=JAN!C25	=D18-(D18*$C$35)	=JAN!C30	=SUM(E18:F18)	=C18-G18
FEB	=FEB!C23	=FEB!C25	=D19-(D19*$C$35)	=FEB!C30	=SUM(E19:F19)	=C19-G19
MAR	=MAR!C23	=MAR!C25	=D20-(D20*$C$35)	=MAR!C30	=SUM(E20:F20)	=C20-G20
APR	=APR!C23	=APR!C25	=D21-(D21*$C$35)	=APR!C30	=SUM(E21:F21)	=C21-G21
MAY	=MAY!C23	=MAY!C25	=D22-(D22*$C$35)	=MAY!C30	=SUM(E22:F22)	=C22-G22
JUN	=JUN!C23	=JUN!C25	=D23-(D23*$C$35)	=JUN!C30	=SUM(E23:F23)	=C23-G23
Total	=SUM(C18:C23)	=SUM(D18:D23)	=SUM(E18:E23)	=SUM(F18:F23)	=SUM(G18:G23)	=SUM(H18:H23)

**WLF = Wheeling Lo*

Peak Period Excess Energy paid during the period		MWh
JAN	=JAN!C17	
FEB	=FEB!C17	
MAR	=MAR!C17	
APR	=APR!C17	
MAY	=MAY!C17	
JUN	=JUN!C17	
	=SUM(C27:C32)	

Wheeling loss factor (WLF)	0.03	%
Wheeling Charge	20	*USD/MWh*
EUCL Customer tariff	94000	*RWF/MWh*
RWF/USD	1300	*RWF*

Cover Invoice | JAN | FEB | MAR | APR | MAY | JUN | Excess Energy Payment | JULY | AUG

Period:	45839	Due Date:	45689			
Invoice Reference:						
		To:	BioNTech Rwanda ltd			
From: Energy Utility Corporation Ltd		Customer ID				
TIN/VAT Number:		Meter Number				
Address:		TIN number				
		Phone				

Item	Energy (MWh)	Tariff (RWF/MWh)	Charge	Tax (18%)	RURA (0.3%)	Total
Wheeling Fee for the period	=MIN(C23*(1+$C$33),C25*(1+$C$33))	=C34*C36	=D13*C13	=E13*18%	=E13*0.3%	=SUM(E13:G13)
Low Power Factor (LPF) Surcharge			=IF(C15<0.9,0.9-C15,0)*$C$23*$C$35	=E14*18%	=E14*0.3%	=SUM(E14:G14)
Cosphi	=COS(ATAN(C24/C23))					
Peak Period Excess Energy Payment	=SUM(C18:C19)					=SUM(H18:H19)
Production under the floor	=MAX(F27-C27,0)	=$C$35	=C18*D18	=E18*18%	=E18*0.3%	=SUM(E18:G18)
Consumption over the threshold	=MAX(C28-F28,0)	=$C$35	=C19*D19	=E19*18%	=E19*0.3%	=SUM(E19:G19)
		TOTAL (RWF):				=SUM(H13,H14,H17)

Invoice calculations and data recording		Unit	Index	Current Index		Previous Index
Energy consumption at Point of Withdrawal	500	MWh	ACTIVE	600		0
Reactive Power	250	kvarh	REACTIVE	400		0
Metered Output at Point of Delivery	490	MWh		650		0
Monthly Peak Delivered Energy	120	MWh	Peak Floor	96	MWh	
Monthly Peak Withdrawn Energy	160	MWh	Peak Threshold	144	MWh	
			Peak Hour Period	18:00-23:00		
Deemed Delivered Energy (during GASE)	0	MWh				
Grid Availability Shortfall Events (GASE)		hrs				
Wheeling loss factor	0.03	%				
Wheeling Charge	20	USD/MWh				
EUCL Customer tariff	106000	RWF/MWh				
RWF/USD	1300	RWF				

Cover Invoice | JAN | FEB | MAR | APR | MAY | JUN | Excess Energy Payment | JULY | AUG | SEPT

Period:	45870	Due Date:					
Invoice Reference:							
		To:					
From: Energy Utility Corporation Ltd		Customer ID					
TIN/VAT Number:		Meter Number					
Address:		TIN number					
		Phone					

Item	Energy (MWh)	Tariff (RWF/MWh)	Charge	Tax (18%)	RURA Fee (0.3%)	Total
Wheeling Fee for the period	=MIN(C23*|1+$C$33\|,C25*\|1+$C$33|)	=C34*C36	=D13*C13	=E13*18%	=E13*0.3%	=SUM(E13:G13)
Low Power Factor(LPF) Surcharge			=IF(C15<0.9,0.9-C15,0)*$C$23*$C$35	=E14*18%	=E14*0.3%	=SUM(E14:G14)
Cosphi	=COS(ATAN(C24/C23))					
Peak Period Excess Energy Payment	=SUM(C18:C19)					=SUM(H18:H19)
Production under the floor	=MAX(F27-C27,0)	=$C$35	=C18*D18	=E18*18%	=E18*0.3%	=SUM(E18:G18)
Consumption over the threshold	=MAX(C28-F28,0)	=$C$35	=C19*D19	=E19*18%	=E19*0.3%	=SUM(E19:G19)
		TOTAL (RWF):				=SUM(H13,H14,H17)

Invoice calculations and data recording		Unit	Index	Current Index		Previous Index
Energy consumption at Point of Withdrawal	600	MWh	ACTIVE	600		0
Reactive Power	250	kvarh	REACTIVE	400		0
Metered Output at Point of Delivery	500	MWh		650		0
Monthly Peak Delivered Energy	110	MWh	Peak Floor	96	MWh	
Monthly Peak Withdrawn Energy	130	MWh	Peak Threshold	144	MWh	
			Peak Hour Period	18:00-23:00		
Deemed Delivered Energy (during GASE)	0	MWh				
Grid Availability Shortfall Events (GASE)		hrs				
Wheeling loss factor	0.03	%				
Wheeling Charge	20	USD/MWh				
EUCL Customer tariff	106000	RWF/MWh				
RWF/USD	1300	RWF				

Cover Invoice | JAN | FEB | MAR | APR | MAY | JUN | Excess Energy Payment | JULY | AUG | SEPT | OCT

Period:	45901	Due Date:					
Invoice Reference:							
		To:					
From: Energy Utility Corporation Ltd		Customer ID					
TIN/VAT Number:		Meter Number					
Address:		TIN number					
		Phone					

Item	Energy (MWh)	Tariff (RWF/MWh)		Charge	Tax (18%)	RURA Fee (0.3%)	Total
Wheeling Fee for the period	=MIN(C23*(1+$C$33),C25*(1+$C$33))	=C34*C36	=D13*C13	=E13*18%	=E13*0.3%	=SUM(E13:G13)	
Low Power Factor(LPF) Surcharge			=IF(C15<0.9,0.9-C15,0)*$C$23*$C$35	=E14*18%	=E14*0.3%	=SUM(E14:G14)	
Cosphi	=COS(ATAN(C24/C23))						
Peak Period Excess Energy Payment	=SUM(C18:C19)					=SUM(H18:H19)	
Production under the floor	=MAX(F27-C27,0)	=$C$35	=C18*D18	=E18*18%	=E18*0.3%	=SUM(E18:G18)	
Consumption over the threshold	=MAX(C28-F28,0)	=$C$35	=C19*D19	=E19*18%	=E19*0.3%	=SUM(E19:G19)	
		TOTAL (RWF):				=SUM(H13,H14,H17)	

Invoice calculations and data recording		Unit	Index	Current Index		Previous Index
Energy consumption at Point of Withdrawal	550	MWh	ACTIVE	600		0
Reactive Power	250	kvarh	REACTIVE	400		0
Metered Output at Point of Delivery	520	MWh		650		0
Monthly Peak Delivered Energy	90	MWh	Peak Floor	96	MWh	
Monthly Peak Withdrawn Energy	110	MWh	Peak Threshold	144	MWh	
			Peak Hour Period	18:00-23:00		
Deemed Delivered Energy (during GASE)	0	MWh				
Grid Availability Shortfall Events (GASE)		hrs				
Wheeling loss factor	0.03	%				
Wheeling Charge	20	USD/MWh				
EUCL Customer tariff	106000	RWF/MWh				
RWF/USD	1300	RWF				

Cover Invoice | JAN | FEB | MAR | APR | MAY | JUN | Excess Energy Payment | JULY | AUG | SEPT | OCT

Period:	45931	Due Date:					
Invoice Reference:							
		To:					
From: Energy Utility Corporation Ltd		Customer ID					
TIN/VAT Number:		Meter Number					
Address:		TIN number					
		Phone					

Item	Energy (MWh)	Tariff (RWF/MWh)	Charge	Tax (18%)	RURA Fee (0.3%)	Total
Wheeling Fee for the period	=MIN(C23*|1+$C$33),C25*\|1+$C$33))	=C34*C36	=D13*C13	=E13*18%	=E13*0.3%	=SUM(E13:G13)
Low Power Factor(LPF) Surcharge			=IF(C15<0.9,0.9-C15,0)*$C$23*$C$35	=E14*18%	=E14*0.3%	=SUM(E14:G14)
Cosphi	=COS(ATAN(C24/C23))					
Peak Period Excess Energy Payment	=SUM(C18:C19)					=SUM(H18:H19)
Production under the floor	=MAX(F27-C27,0)	=$C$35	=C18*D18	=E18*18%	=E18*0.3%	=SUM(E18:G18)
Consumption over the threshold	=MAX(C28-F28,0)	=$C$35	=C19*D19	=E19*18%	=E19*0.3%	=SUM(E19:G19)
		TOTAL (RWF):				=SUM(H13,H14,H17)

Invoice calculations and data recording		Unit	Index	Current Index		Previous Index
Energy consumption at Point of Withdrawal	550	MWh	ACTIVE	600		0
Reactive Power	250	kvarh	REACTIVE	400		0
Metered Output at Point of Delivery	490	MWh		650		0
Monthly Peak Delivered Energy	120	MWh	Peak Floor	96	MWh	
Monthly Peak Withdrawn Energy	140	MWh	Peak Threshold	144	MWh	
			Peak Hour Period	18:00-23:00		
Deemed Delivered Energy (during GASE)	6.2	MWh				
Grid Availability Shortfall Events (GASE)	2.2	hrs				
Wheeling loss factor	0.03	%				
Wheeling Charge	20	USD/MWh				
EUCL Customer tariff	106000	RWF/MWh				
RWF/USD	1300	RWF				

Cover Invoice | JAN | FEB | MAR | APR | MAY | JUN | Excess Energy Payment | JULY | AUG | SEPT | OCT

Period:	45962	Due Date:	
Invoice Reference:			
		To:	
From: Energy Utility Corporation Ltd		Customer ID	
TIN/VAT Number:		Meter Number	
Address:		TIN number	
		Phone	

Item	Energy (MWh)	Tariff (RWF/MWh)	Charge	Tax (18%)	RURA Fee (0.3%)	Total
Wheeling Fee for the period	=MIN(C23*(1+$C$33),C25*(1+$C$33))	=C34*C36	=D13*C13	=E13*18%	=E13*0.3%	=SUM(E13:G13)
Low Power Factor(LPF) Surcharge			=IF(C15<0.9,0.9-C15,0)*$C$23*$C$35	=E14*18%	=E14*0.3%	=SUM(E14:G14)
Cosphi	=COS(ATAN(C24/C23))					
Peak Period Excess Energy Payment	=SUM(C18:C19)					=SUM(H18:H19)
Production under the floor	=MAX(F27-C27,0)	=$C$35	=C18*D18	=E18*18%	=E18*0.3%	=SUM(E18:G18)
Consumption over the threshold	=MAX(C28-F28,0)	=$C$35	=C19*D19	=E19*18%	=E19*0.3%	=SUM(E19:G19)
		TOTAL (RWF):				=SUM(H13,H14,H17)

Invoice calculations and data recording		Unit	Index	Current Index		Previous Index
Energy consumption at Point of Withdrawal	510	MWh	ACTIVE	600		0
Reactive Power	250	kvarh	REACTIVE	400		0
Metered Output at Point of Delivery	500	MWh		650		0
Monthly Peak Delivered Energy	110	MWh	Peak Floor	96	MWh	
Monthly Peak Withdrawn Energy	140	MWh	Peak Threshold	144	MWh	
			Peak Hour Period	18:00-23:00		
Deemed Delivered Energy (during GASE)	3	MWh				
Grid Availability Shortfall Events (GASE)	1	hrs				
Wheeling loss factor	0.03	%				
Wheeling Charge	20	USD/MWh				
EUCL Customer tariff	106000	RWF/MWh				
RWF/USD	1300	RWF				

Cover Invoice | JAN | FEB | MAR | APR | MAY | JUN | Excess Energy Payment | JULY | AUG | SEPT | OCT | NOV

Period:	45932	Due Date:					
Invoice Reference:							
		To:					
From: Energy Utility Corporation Ltd		Customer ID					
TIN/VAT Number:		Meter Number					
Address:		TIN number					
		Phone					

Item	Energy (MWh)	Tariff (RWF/MWh)	Charge	Tax (18%)	RURA Fee (0.3%)	Total
Wheeling Fee for the period	=MIN(C23*(1+$C$33),C25*(1+$C$33))	=C34*C36	=D13*C13	=E13*18%	=E13*0.3%	=SUM(E13:G13)
Low Power Factor(LPF) Surcharge			=IF(C15<0.9,0.9-C15,0)*$C$23*$C$35	=E14*18%	=E14*0.3%	=SUM(E14:G14)
Cosphi	=COS(ATAN(C24/C23))					
Peak Period Excess Energy Payment	=SUM(C18:C19)					=SUM(H18:H19)
Production under the floor	=MAX(F27-C27,0)	=$C$35	=C18*D18	=E18*18%	=E18*0.3%	=SUM(E18:G18)
Consumption over the threshold	=MAX(C28-F28,0)	=$C$35	=C19*D19	=E19*18%	=E19*0.3%	=SUM(E19:G19)
		TOTAL (RWF):				=SUM(H13,H14,H17)

Invoice calculations and data recording		Unit	Index	Current Index		Previous Index
Energy consumption at Point of Withdrawal	600	MWh	ACTIVE	600		0
Reactive Power	250	kvarh	REACTIVE	400		0
Metered Output at Point of Delivery	585	MWh		650		0
Monthly Peak Delivered Energy	120	MWh	Peak Floor	96	MWh	
Monthly Peak Withdrawn Energy	160	MWh	Peak Threshold	144	MWh	
			Peak Hour Period	18:00-23:00		
Deemed Delivered Energy (during GASE)	0	MWh				
Grid Availability Shortfall Events (GASE)		hrs				
Wheeling loss factor	0.03	%				
Wheeling Charge	20	USD/MWh				
EUCL Customer tariff	106000	RWF/MWh				
RWF/USD	1300	RWF				

Cover Invoice | JAN | FEB | MAR | APR | MAY | JUN | Excess Energy Payment | JULY | AUG | SEPT | OCT | NOV | DEC

Period:	45992			Due Date:			
Invoice Reference:							
				To:	BioNTech Rwanda I		
From: Energy Utility Corporation Ltd				Customer ID			
TIN/VAT Number:				Meter Number			
Address:				TIN number			
				Phone			

Item	Energy (MWh)	Tariff (RWF/MWh)	Charge	Tax (18%)	RURA Fee (0.3%)		Total
Total Excess Energy for the Electricity Period	=MAX(H24,0)	=C37	=D13*C13	=E13*18%	=E13*0.3%	=SUM(E13:G13)	
less Peak Period Excess Energy	=IF(C13=0,0,$C$30)	=C37	=D14*C14	=E14*18%	=E14*0.3%	=-SUM(E14:G14)	
						=MAX(0,SUM(H13:H14))	

Invoice calculations and data recording	Consumption (MWh)	Production (MWh)	Net WLF (MWh)	DDE (MWh)	Production net WLF	Net consumption (MWh)
JULY	=JULY!C23	=JAN!C25	=D18-(D18*$C$35)	=JAN!C30	=SUM(E18:F18)	=C18-G18
AUG	=AUG!C23	=FEB!C25	=D19-(D19*$C$35)	=FEB!C30	=SUM(E19:F19)	=C19-G19
SEPT	=SEPT!C23	=MAR!C25	=D20-(D20*$C$35)	=MAR!C30	=SUM(E20:F20)	=C20-G20
OCT	=OCT!C23	=APR!C25	=D21-(D21*$C$35)	=APR!C30	=SUM(E21:F21)	=C21-G21
NOV	=NOV!C23	=MAY!C25	=D22-(D22*$C$35)	=MAY!C30	=SUM(E22:F22)	=C22-G22
DEC	=DEC!C23	=JUN!C25	=D23-(D23*$C$35)	=JUN!C30	=SUM(E23:F23)	=C23-G23
Total	=SUM(C18:C23)	=SUM(D18:D23)	=SUM(E18:E23)	=SUM(F18:F23)	=SUM(G18:G23)	=SUM(H18:H23)

*WLF = Wheeling L

Peak Period Excess Energy paid during the period		MWh
JULY	=JULY!C17	
AUG	=AUG!C17	
SEPT	=SEPT!C17	
OCT	=OCT!C17	
NOV	=NOV!C17	
DEC	=DEC!C17	
	=SUM(C27:C32)	

Wheeling loss factor (WLF)	0.03	%
Wheeling Charge	20	USD/MWh
EUCL Customer tariff	94000	RWF/MWh
RWF/USD	1300	RWF

JAN | FEB | MAR | APR | MAY | JUN | Excess Energy Payment | JULY | AUG | SEPT | OCT | NOV | DEC | Excess Energy Payment (2)

Schedule 6
Deemed Delivered Energy

1 Deemed Delivered Energy Formula During Off-Peak Hours

During periods where the Solar Facility is available to deliver power, but the power cannot be injected into the Grid due to a Grid Availability Shortfall Event the EUCL has agreed to account for Deemed Delivered Energy (Available Energy). Available Energy will be calculated with reference to actual performance of the system, taking into consideration the onsite solar irradiation.

Available Energy for any given calendar month is calculated by considering the Performance Ratio calculated for that particular month and adjusting for global horizontal irradiance for each 15-minute interval during the periods of an Outage or Curtailed Operation.

To calculate the Available Energy for the 15-minute interval i, the following formula shall be used:

$$E_{Available(i)} = |PR_{month} \times Cap \times Time \times Irr_i| - E_{metered(i)}$$

Where:

$E_{Available(i)}$	=	Available Energy (kWh) for 15-minute interval i.
PR_{month}	=	Actual Performance Ratio for that particular month calculated according to the formula below.
Cap	=	Installed capacity of the Solar Facility (kWp)
$Time$	=	Time in hours derived as (interval i/ 60 minutes)
$Irr_{(i)}$	=	Global in-plane irradiance measured by the onsite reference pyranometer and averaged over 15-minute interval i (kW/m^2).
$E_{metered(i)}$	=	Energy metered by the billing meter (Delivered Energy) in kWh at the Point of Delivery during interval i.

Performance Ratio Formula (PRmonth)

The following data will be gathered with a maximum sampling period of 1 minute and averaged over 15-minute intervals for the month:

- Global horizontal irradiance - GHI (W/m2);
- AC output power in kW measured by the billing meter (kWh);

- PV power limit setpoint – being the value in kW which the solar hybrid controller has set as the limit for overall PV output;

The following 15-minute intervals will not be considered valid and will be excluded from the test:

- inverters are not available;
- the data is corrupted; or
- The PV output is being curtailed by the hybrid controller.

PRmonth will be calculated using the following formula:

$$PR_{month} = \left(\sum_k P_{out,k} \times \tau_k\right) \Big/ \left(\sum_k \frac{P_0 \times G_k \times \tau_k}{G_{i,ref}}\right)$$

Where:

PR_{month}	=	Actual Performance Ratio for that particular month calculated according to the formula below.
$\sum_k$	=	The summation over all valid recording intervals in the month
$P_{out,k}$	=	The average AC output power in kW measured by the billing meter during the recording interval k.
τ_k	=	The duration in hours of the kth recording interval within a reporting period.
P_0	=	The DC power rating of the entire Facility in kWp calculated by summing up all the rated PV module capacities in the Facility;
G_k	=	The average global horizontal irradiance measured by the onsite pyranometer(s) in kW/m2 during the recording interval k;
G_{ref}	=	The reference irradiance at STC at which P_0 is determined (1 kW/m2);

In the event that there are less than 100 valid recording intervals in a month, the Performance Ratio will be set as per the table below, for the month in consideration. This table will be completed by the Seller 1 month before COD once As-Built data is available.

Values for PR_{Month}	
	PR Based on Global Horizontal Irradiation
January	
February	
March	
April	
May	
June	
July	
August	
September	
October	
November	
December	
Annual	

***Note:** Values for PRMonth are based on an expected installed capacity of x kWp. Should the final installed capacity of the Solar Facility differ from this at Commercial Operation Date, the PRMonth values will be adjusted pro-rata according to the final installed capacity.

Deemed Delivered Energy During Peak Hours (6.00 pm – 11.00 pm)

The BESS will deliver a set amount of energy into the grid between 6.00 pm – 11.00 pm local time. The BESS will be configured to discharge at a constant rate of 800kW during the Peak Hour Period, delivering a total of 4MWh to the grid during this period.

During the Peak Hour Period where the BESS is available to deliver power, but the power cannot be injected into the Grid due to a Grid Availability Shortfall Event the Customer has agreed to account for Deemed Delivered Energy (Available Energy). Available Energy will be calculated with reference to actual state of charge of the BESS and the Minimum State of Charge.

Deemed Delivered Energy during the Peak Hour Period is calculated by considering the Grid Availability, BESS Minimum State of Charge and BESS State of Charge during each 5-minute interval during the periods of an Outage or Curtailed Operation.

To calculate the Deemed Delivered Energy during the Peak Hour Period for the 5-minute interval i, the following formula shall be used:

For each 5-minute interval i, during a Grid Availability Shortfall Event,

If,

BESS State of Charge > BESS Minimum State of Charge

$E_{Available(i)} = 66.67\ kWh$

Where:

$E_{Available(i)}$ = Available Energy (kWh) for 5-minute interval i.

If the centralised monitoring platform is not available during the time of the Grid Availability Shortfall Event, or if the data is corrupted, data for a similar period in the previous day where the grid was available will be used.

Schedule 7

Grid Code

The Generating Facility shall comply with the requirements set out in Version 1.0 of The Rwanda Grid Code, published in August 2013, as applicable to an inverter-based embedded generator within the code. A summary of the requirements for compliance is provided within the table below.

Topic	Requirement
Point of Connection	• As described in Schedule 3
Protection	• Embedded generator will ensure grading with upstream EUCL system (Overcurrent, Earth fault) • BESS and PV Inverters will have frequency and voltage protection elements included as required by the code • EUCL to provide Maximum and Minimum fault level at Point of Connection, as well as upstream protection settings • Protection Coordination report will be shared with EUCL
Metering	• As described in Schedule 3

Telecontrol	• The Generating Facility will install SCADA at their Power Plant that will be integrated with existing EUCL SCADA to ensure the real time plant visibility at National Electricity Control Centre, NECC (EUCL) for supervisory and monitoring purposes.
	• All SCADA parameters shall be transmitted via Modbus TCP/IP communication protocols
	• The following Analog/Digital signals shall be provided to the System Operator:
	  • Active Power at POD (MW)
	  • Reactive Power at POD (MVAr)
	  • POD breaker status
	  • Voltage
	  • Current
	  • Frequency
	  • Power factor
	• Telephone communication shall also established between the System Operator and plant operating personnel.

Quality of Supply	• Embedded generator will follow IEC 61000 / NRS 048 limits within its design
Monitoring	• EUCL will be provided access to cloud-based monitoring platform (VCOM) to review performance of the embedded generator

Grid Code Compliance Testing	• Grid Code Compliance testing procedure shall be shared prior to commissioning, procedure will include:
	  • Reactive power setpoint changes and assessment of the system response (Between 0.95 PF leading / Lagging)
	  • Active power setpoint changes (increase and decrease) and assessment of the system response
	  • Loss of grid test
	  • Assessment of the plant response to grid frequency variations

Schedule 8

Forecast Energy Output

FORECASTING INFORMATION

The forecasting information shared by Izuba within this schedule is a non-binding estimate provided for information purposes, to assist EUCL with its grid management and dispatch planning.

1 Daily Forecast Generation Profile

Time	Hours	MWh
00:00	01:00	
01:00	02:00	
02:00	03:00	
03:00	04:00	
04:00	05:00	
05:00	06:00	
06:00	07:00	
07:00	08:00	
08:00	09:00	
09:00	10:00	
10:00	11:00	
11:00	12:00	
12:00	13:00	
13:00	14:00	
14:00	15:00	
15:00	16:00	
16:00	17:00	
17:00	18:00	
18:00	19:00	
19:00	20:00	
20:00	21:00	

21:00	22:00	
22:00	23:00	
23:00	24:00	

2 Weekly Forecast Generation Profile

The developer (Izuba) shall provide to EUCL or simply the Grid System Operator of Distributor and Transmission systems on a Weekly basis, before 09:00 on the preceding Wednesday, the Week ahead generation forecast, calculated at the Delivery Point.

Day	**MWh**	**Available MW**
1st		
2nd		
3rd		
4th		
5th		
6th		
7th		

3 Annual Forecast Generation Profile

The developer (Izuba) to provide the average annual forecasted Energy Output MWh for the term (20 years) of operation or for the duration of this Agreement by completing the table below. Forecasts shall be based upon P50 estimates.

Contract Year	**Forecast Annual Energy Output (MWh)**	**Contract Year**	**Forecast Annual Energy Output (MWh)**
1		11	
2		12	
3		13	
4		14	

Contract Year	Forecast Annual Energy Output (MWh)	Contract Year	Forecast Annual Energy Output (MWh)
5		15	
6		16	
7		17	
8		18	
9		19	
10		20	

Schedule 9

Permits

Permit	Issuing Institution
Electricity Generation License	Rwanda Utility Regulatory Agency (RURA)
Occupancy Permit	Kayonza District
Environmental Impact Assessment Certificate	Rwanda Development Board (RDB)
Company Registration Certificate	Rwanda Development Board (RDB)
Company Investment Certificate	Rwanda Development Board (RDB)
Tax Clearance Certificate	Rwanda Revenue Authority (RRA)

Schedule 10
Construction reports

- Permits, Licenses and Approvals: [any significant issues or variations which are related to Permits may be reported.]

- Progress Section:

  - Engineering and Design: *[outlook of possible modifications in project design and planning update]*

  - Procurement: *[update on the status of procurement and receipt of equipment and material.]*

  - Works on Site: *[providing details on progress related to different subtasks: fencing, civil works, trenches, foundations, mechanical assembly, LV installation, MV installation, monitoring system, security system, surveillance]*

- Safety, Health and Environmental: *[reporting of any health and safety or environmental incidents at the Site]*

- Variation Orders:

- Annexes: *[nonconformities, pictures, etc.]*

Schedule 11

Generating Facility Information

The below information is based on the preliminary design of the Generating Facility and may be subject to change after the detailed design phase:

Project Name:	Rwinkwavu Solar PV Project
Contracted Capacity: [MW_{ac}]	747 881 5 kWh / year
Maximum Export Capacity (as defined in PPA or Wheeling Agreement, as the case may be): [MW]	5.1 MW
PV Module Type: [e.g. Polycrystalline, Monocrystalline, Thin Film]	Monocrystalline
Number of PV Modules:	8 964
Number of module strings (where a string constitutes a number of modules connected to a common inverter):	14
Mounting Type (fixed,single axis tracking or double axis tracking):	Fixed
PV inverter (manufacturer and model):	Sungrow SG350-HX
Maximum instantaneous AC rated capacity of inverter: [MW]	4.9 MW
Maximum continuous AC rated capacity of inverter: [MW]	4.5 MW
Number of inverters:	14
Transformer ratings:	5 MVA, 0.8/15 kV, Dy11
Number of transformers:	1
Planned voltage connection level:	15 kV
Planned connection point (i.e. the name of the substation or distribution line onto which the Project is intended to connect):	Rwinkwavu substation, 15 kV incomer panel

Schedule 12

Grid Operating Procedures

Topic	Resolution
Point of Connection	Point of Connection parameters: 15 kV voltage Maximum fault level 2.3 kA Minimum fault level TBD post detailed design Protection requirements to comply with the Grid Code.
Telecontrol	Izuba will install SCADA at the Generation Facility that will be integrated with existing EUCL SCADA to ensure the real-time plant visibility of read-only data at National Electricity Control Center, NECC (EUCL) for supervisory and monitoring purposes.
Quality of Supply	Embedded generator will follow IEC 61000 / NRS 048 limits within its design. IEC 61000-3-6 apportionment techniques will be applied to define current limits where applicable.
Testing	The system response assessment will include the below testing regime which will be witnessed by EUCL for acceptance: - Reactive power setpoint changes and assessment of the system response - Active power setpoint changes and assessment of the system response - Loss of grid and assessment of anti-islanding response
Synchronisation	BESS inverters will be operated in grid-following mode. Therefore, the Generating Facility will not generate without external voltage reference from the EUCL grid.

Schedule 13
Generating Facility Buy-out Price

Determination Date means the date prior to the date of occurrence of the EUCL Event of Default.

Generating Facility Buy-Out Price means as at the Determination Date, the fair market value of the Generating Facility, being the price which might reasonably be expected to be obtained upon a sale of the Generating Facility for cash consideration on the basis of an arms' length transaction between a willing buyer and a willing seller as at the Determination Date on the basis that the Generating Facility is operating, and will continue to operate.

1 Where Izuba provides notice to EUCL pursuant to clause 17.5(b)(ii), Izuba shall within a period of fifteen (15) Days from the Determination Date propose at least two (2) certified independent reputable accountants recognised by the Institute of Certified Public Accountant of Rwanda (ICPAR) or its successor to calculate and certify the Generating Facility Buy-Out Price. EUCL shall provide its non-objection, not to be unreasonably withheld, on at least one (1) of the independent reputable accountants within fifteen (15) Days from its receipt of the proposal from Izuba. Izuba shall then notify EUCL of the Generating Facility Buy-Out Price and shall provide supporting information (including the certification of the independent reputable accountant).

2 EUCL shall within fifteen (15) Business Days of receipt of notice from Izuba pursuant to paragraph 1 of this Schedule 13, notify Izuba whether it accepts or rejects (acting reasonably and in good faith) the Generating Facility Buy-Out Price.

3 Where either EUCL accepts the Generating Facility Buy-Out Price, or EUCL fails to accept or reject the Generating Facility Buy-Out Price within fifteen (15) Business Days of receipt of notice from Izuba pursuant to paragraph 1 of this Schedule 13 (in which case the Generating Facility Buy-Out Price shall be deemed to be accepted), EUCL shall pay the Generating Facility Buy-Out Price on or before the Invoice Due Date.

4 Where EUCL acting reasonably and in good faith rejects the Generating Facility Buy-Out Price pursuant to paragraph 2 of this Schedule 13, EUCL shall provide detail of the elements of the Generating Facility Buy-Out Price which are not acceptable to it. EUCL and Izuba shall discuss the basis upon which EUCL has rejected the Generating Facility Buy-Out Price, and may consult with the independent accountant, in order to agree (each acting reasonably and in good faith) upon any adjustment to the Generating Facility Buy-Out Price.

If following a further period of fifteen (15) Business Days EUCL and Izuba are unable to agree upon the replacement Generating Facility Buy-Out Price, either EUCL or Izuba may refer the Dispute to an Expert under and in accordance with clause 19.3.